UJEAS

UNIZIK JOURNAL OF ENGINEERING AND APPLIED SCIENCES

UNIZIK Journal of Engineering and Applied Sciences 6(3), September (2026), 3655-3665
Journal homepage: https://journals.unizik.edu.ng/index.php/ujeas
PRINT ISSN: 2992-4383 || ONLINE ISSN: 2992-4391

Influence of Web Thickness on the Compressive Strength of Sandcrete Hollow Blocks

Onodagu P.D*
Department of Civil Engineering, Nnamdi Azikiwe University, Awka, Anambra State
Aginam C.H.
Department of Civil Engineering, Nnamdi Azikiwe University, Awka, Anambra State
Onipede A.O.
Department of Civil Engineering, Nnamdi Azikiwe University, Awka, Anambra State

**Corresponding Author's E-mail: Drchris@you.com*

Abstract
The prevalence of buildings with poor structural stability in developing nations like Nigeria is a growing concern, primarily driven by the use of substandard construction materials. As two-cell hollow sandcrete blocks are a dominant masonry unit in the region, understanding the impact of their geometry—specifically web thickness—on structural integrity is critical. This study investigates the influence of varying web thicknesses (20 mm, 25 mm, 35 mm, 40 mm, 45 mm, and 50 mm) on the engineering properties of nine-inch sandcrete blocks produced with different cement-sand ratios (1:12, 1:14, 1:16, and 1:20). A total of 216 samples were subjected to three curing regimes: air curing, water sprinkling, and water submersion. Experimental results revealed that bulk density and compressive strength increased with higher web thickness and richer cement content, while water absorption decreased. Bulk density ranged from 1627.49 kg/m³ to 1997.87 kg/m³, and water absorption varied between 230.60 kg/m³ and 289.34 kg/m³. At 28 days, compressive strengths ranged from 0.59 N/mm² to 2.88 N/mm² across different curing methods. The study concludes that blocks with web thicknesses of 35 mm and above met the 2.1 N/mm² compressive strength criterion experimentally, confirming that the NIS 978-mandated minimum of 50 mm for 9-inch load-bearing blocks provide an adequate structural safety margin. Furthermore, water-submerged curing was identified as the most effective method for enhancing block performance. These findings reinforce the importance of strict compliance with the NIS 978 minimum web thickness of 50 mm, alongside richer mix proportions, to ensure structural safety and durability.
Keywords: Web thickness, Hollow sandcrete block, Compressive strength, Water absorption, Curing techniques, Cement-sand ratio.

1. Introduction

Housing is one major necessity of life (Rasheed & Akinleye, 2016). Across the world, a wide variety of construction materials are employed in the development of residential buildings, particularly for walling units, which constitute a major structural and functional component of any housing system. These materials differ significantly from region to region due to variations in cultural practices, climatic conditions, availability of natural resources, construction technology, and economic considerations. Sandcrete blocks are widely used in Nigeria as walling units and over 90% of houses in Nigeria are being constructed of sandcrete blocks (Robert et al., 2025; Samson Odeyemi et al., 2024). This level of adoption spans urban and rural housing, fencing, partitioning in commercial and institutional structures, and even smaller-scale load-bearing applications where full reinforced concrete frames are not economically feasible (Negrin & Chagoyén, 2022). The reasons for their ubiquity are practical and deeply rooted in local realities: they are lighter and easier to lay than solid concrete blocks, relatively inexpensive to produce using locally available sharp sand and ordinary Portland cement, and offer good thermal and sound insulation properties suited to Nigeria's tropical climate (Adisa et al., 2026). In a nation grappling with rapid urbanization and a massive housing deficit, sandcrete blocks enable faster, cheaper construction compared to imported or more energy-intensive alternatives such as burnt bricks or stabilized earth blocks, making them indispensable for low-income single-storey homes through to multi-storey developments.

According to the Nigerian Industrial Standard NIS 978 (2017) issued by the Standards Organisation of Nigeria (SON), sandcrete blocks are formally defined as composite materials made up of cement, fine aggregates (sand), and water, produced by extrusion. This standard classifies them as masonry units whose dimensions exceed those specified for bricks in normal orientation. They are typically produced in solid or—far more commonly—hollow formats, with the latter featuring one or more vertical voids to reduce weight and material consumption. Standard sizes include the widely used 450 mm × 225 mm × 225 mm (9-inch) for external walls and 450 mm × 225 mm × 150 mm (6-inch) for internal walls, with tight dimensional tolerances of ±1–2 mm. The 2017 edition emphasizes

performance criteria such as minimum compressive strength (differentiated for load-bearing versus non-load-bearing uses), water absorption limits (generally not exceeding 12–15% depending on type), and density thresholds. It also promotes proper mix proportions—commonly around 1:6 cement-to-sand by volume for non-load-bearing blocks—along with adequate curing and quality control in both manual and mechanized production, marking a shift toward greater uniformity through semi-automated extrusion methods compared to older hand-moulding techniques. Complementing the Nigerian standards, the American Society for Testing and Materials (ASTM) specifications for concrete masonry materials further classify hollow sandcrete blocks into two distinct types: hollow load-bearing blocks, often referred to as sandcrete blocks (ASTM C90-22), with dimensions of 450 mm × 225 mm × 225 mm, and hollow non-load-bearing blocks, often referred to as sandcrete blocks (ASTM C129-17), with dimensions of 450 mm × 150 mm × 225 mm. As illustrated in Figures 1–4, these hollow and solid sandcrete blocks are shown with their appropriate dimensions, highlighting the geometric differences between the two categories.

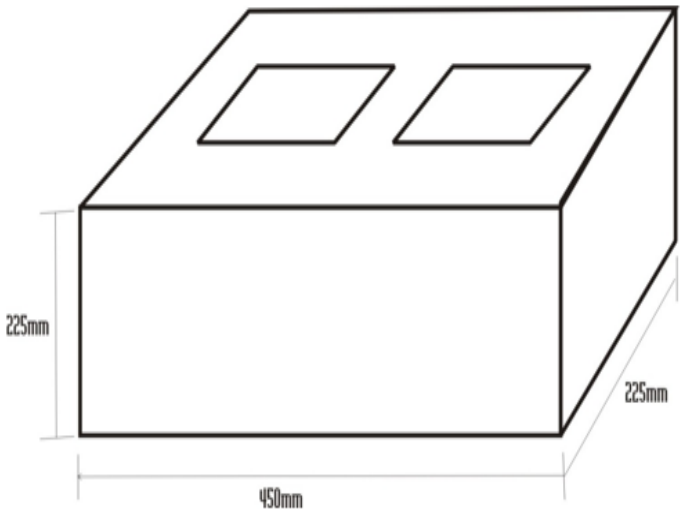

Figure 1: Hollow Load Bearing Block.

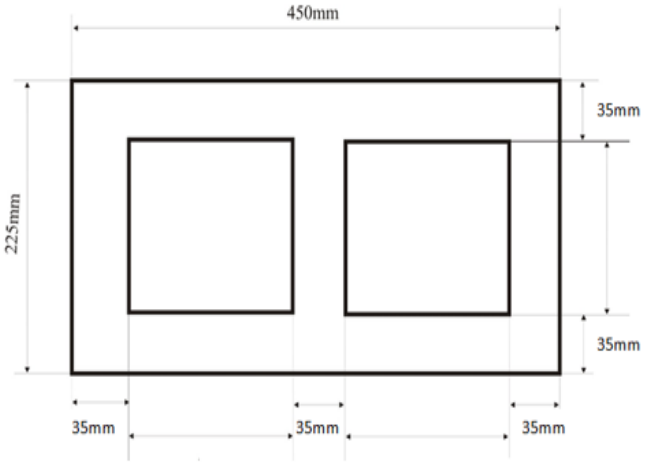

Figure 2: Laying Face of a Hollow Load Bearing Block

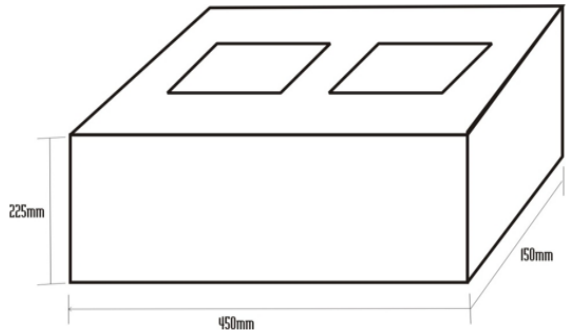

Figure 3: Hollow Non-Load Bearing Block

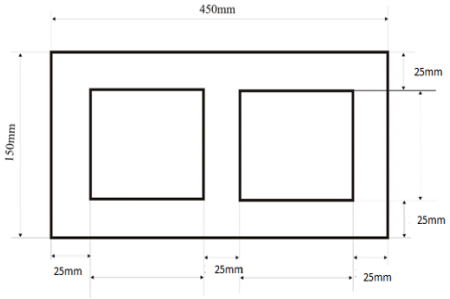

Figure 4: Laying Face of Hollow Non-Load Bearing Block

In hollow sandcrete blocks, geometry, comprising cells (the internal voids or cavities), webs (the vertical partitions that connect the outer faces), and shells (the continuous outer face shells)—plays a critical role in determining overall structural performance (Akanbi et al., 2022). These elements collectively define the net load-bearing cross-sectional area, stress distribution under compression, shear resistance, and stability of masonry walls. Unlike solid blocks, hollow designs reduce weight and material consumption while maintaining adequate strength for low-to-medium-rise construction when properly proportioned (BS EN 771-3, 2011). The cells, webs, and shells influence how loads are transferred through the block: shells and webs act as the primary load paths, while cells reduce dead weight and provide space for functional enhancements. Poor geometry (e.g., uneven webs or oversized cells) can lead to localized stress concentrations, cracking, or reduced wall integrity, particularly under eccentric loading or seismic forces common in Nigeria (Neville, 2011). Web thickness refers to the dimension of the internal partitions (webs) that separate the cells within hollow sandcrete blocks and connect them to the outer shells. According to Nigerian Industrial Standards (SON, 2021), minimum web thickness values are specified based on block type and usage. These include 25 mm for non-load-bearing 113 mm blocks, 37.5 mm for 150 mm load-bearing blocks, and

50 mm for 225 mm (9-inch) load-bearing blocks. These limits ensure adequate net area for load transfer and help maintain structural integrity.

Web thickness plays a critical role in determining compressive strength and overall structural performance (Burgueño et al., 2010, 2014; Shen et al., 2019). Increasing web thickness enhances the effective cross-sectional area resisting loads, thereby improving compressive capacity, stress distribution, and resistance to crushing. In contrast, thinner webs reduce material volume and load-bearing area, leading to lower strength, increased water absorption, and higher susceptibility to cracking under service conditions (Olagunju & Raheem, 2021). Studies in Nigeria have shown that blocks with substandard web thicknesses—typically ranging from 15 to 40 mm instead of the required 37.5–50 mm—exhibit significantly reduced compressive strengths, often between 0.41 and 1.05 N/mm² (Olagunju & Raheem, 2021; Robert et al., 2020). These values fall below the minimum requirements of 2.5–3.45 N/mm² specified by standards. The reduction in strength is largely attributed to decreased net area and stress concentration around thinner webs. Additionally, larger cavity sizes, which result in thinner webs, further reduce density and increase permeability, negatively affecting durability, especially in humid environments.

Despite its importance, limited research in Nigeria has systematically examined web thickness as an independent variable. Most studies focus on mix proportions, curing methods, and material properties, with less emphasis on geometric parameters such as web configuration (Akanbi et al., 2022; Gana et al., 2022). Although some theoretical analyses exist, there is a lack of comprehensive experimental studies that isolate web thickness under controlled conditions for design optimization. A major practical issue is that many block manufacturers intentionally reduce web thickness to minimize production costs. This is often achieved by enlarging cavity sizes or using worn or modified moulds, thereby reducing the quantity of materials required per block. Field observations across several Nigerian states indicate that many commercially produced blocks do not meet the standard web thickness requirements, resulting in poor compressive strength and compromised structural safety. This highlights the need for stricter quality control, regulatory enforcement, and increased awareness of the structural importance of web thickness in sandcrete block production. Thus, this study investigates the influence of web thickness on the engineering properties of nine-inch hollow sandcrete blocks. Specifically, it evaluates the effects of varying web thicknesses (20–50 mm), cement–sand ratios (1:12–1:20), and curing methods (air curing, water sprinkling, and water submersion) on the compressive strength, bulk density, and water absorption characteristics of the blocks, with the aim of determining the optimal combination of these parameters for improved strength and durability.

2.0 Materials and methods

2.1 Materials

Ordinary Portland Cement (OPC) conforming to NIS 444-1:2003 was used as the binder. The fine aggregate was locally sourced sharp sand, clean, well-graded, and free from deleterious materials. Potable water meeting the requirements of BS EN 1008 (2002) was used for both mixing and curing.

2.2 Materials

2.2.1 Mix Proportions and Batching

Four cement-to-sand mix ratios by weight (1:12, 1:14, 1:16, and 1:20) were adopted to reflect common field practices in Nigeria. All materials were batched by weight using an electronic balance for accuracy.

2.2.2 Mixing, Moulding and Compaction

Mixing was carried out mechanically in a concrete mixer for approximately one minute until a homogeneous mixture was obtained. The mix was then placed into steel moulds of nominal size 450 mm × 225 mm × 225 mm (9 inches). Prior to casting, the moulds were cleaned and lightly coated with engine oil. The fresh mix was compacted mechanically, with special attention given to the corners and edges to ensure uniform density. The drop height during filling was limited to 1 m to minimise segregation.

2.2.3 Curing

All specimens were cured for 28 days under three different regimes in accordance with NIS 978:2017:

- Air curing (specimens stored under shade at ambient conditions),
- Water sprinkling (periodic wetting at regular intervals), and
- Water submersion (complete immersion in water).

These curing methods were selected to evaluate their influence on the compressive strength and durability of the blocks.

2.3 Experimental Design

Hollow sandcrete blocks were produced with six web thicknesses: 20 mm, 25 mm, 30 mm, 35 mm, 40 mm, and 50 mm. Each web thickness was combined with the four mix ratios and the three curing regimes, resulting in a full factorial experimental matrix. For each combination, three replicate specimens were prepared, making a total of 216 blocks (6 web thicknesses × 4 mix ratios × 3 curing methods × 3 replicates).

2.4 Aggregate Characterisation

Sieve analysis of the fine aggregate was performed according to BS EN 933-1 (2012). A 500 g oven-dried sample was mechanically sieved through a nest of sieves ranging from 4.75 mm to 0.075 mm. The particle size distribution curve was plotted, and the coefficients of uniformity (Cu) and curvature (Cc) were determined from the D_{10}, D_{30}, and D_{60} values.

2.5 Water Absorption Test

Water absorption capacity of the cured blocks was determined in accordance with ASTM-C140 (2017). Saturated surface-dry specimens were weighed (M_s), oven-dried at 105 ± 5 °C to constant mass (M_d), and the water absorption per unit volume calculated as:

$$\text{Water absorption } (\text{kg/m}^3) = \frac{M_s - M_d}{v} \qquad (1)$$

where V is the volume of the block in m³. This test provided an indication of the porosity and potential durability of the blocks.

2.6 Bulk Density Test

Bulk density was determined in accordance with ASTM C140 (2017) using whole-block geometric measurements. Each cured block was weighed to the nearest 0.1 g using an electronic balance. The overall dimensions — length, width, and height — were measured with a steel rule to the nearest 1 mm, and the gross volume was computed from these measurements. Bulk density was then calculated as the ratio of the oven-dry mass of the block to its gross volume, expressed in kg/m³.

2.7 Compressive Strength Test

Compressive strength testing was conducted in accordance with BS EN 772-1 (2011) at 7, 14, and 28 days of curing. The bearing surfaces of the testing machine were cleaned, and each block was centrally positioned on the lower platen. Load was applied at a constant rate of approximately 4 MPa/min until failure. The maximum failure load was recorded, and compressive strength was calculated using the formula:

$$\text{Compressive strength } (\text{N/mm}^2) = \frac{\text{P}}{A_n} \qquad (2)$$

where P is the failure load (N) and A_n is the net cross-sectional area of the block (mm²), excluding the hollow portions. Three replicate specimens were tested for each experimental combination, and the average value reported. The main parameters investigated in this study are summarised in Table 1.

Table 1: Main parameters

Parameter	Levels/Description
Block size	450 mm × 225 mm × 225 mm
Web thickness	20, 25, 30, 35, 40, 50 mm
Cement: sand ratio	1:12, 1:14, 1:16, 1:20
Curing method	Air curing, Water sprinkling, Water submersion
Curing age (testing)	7, 14, 28 days
Tests performed	Sieve analysis, Water absorption, Bulk density, Compressive strength

3.0 Result and Discussion

3.1 Sieve Analysis of Fine Aggregates

The particle size distribution of the Onitsha sharp sand, determined in accordance with BS EN 933-1, is presented in Figure 5. From a total sample mass of 1,928 g, the key gradation parameters were obtained as D_{10} = 0.22 mm, D_{30} = 0.34 mm, and D_{60} = 0.49 mm. These values yielded a coefficient of uniformity (C_u) of 2.23 and a coefficient of curvature (Cc) of 1.07. Although the sand does not strictly satisfy the well-graded criteria for clean sands under the Unified Soil Classification System (USCS), which requires $C_u \geq 6$ and $1 \leq Cc \leq 3$, it falls within the acceptable grading limits specified in BS EN 933-1 (2012) for fine aggregates used in concrete and masonry products. Consequently, the sand is considered suitable for sandcrete block production.

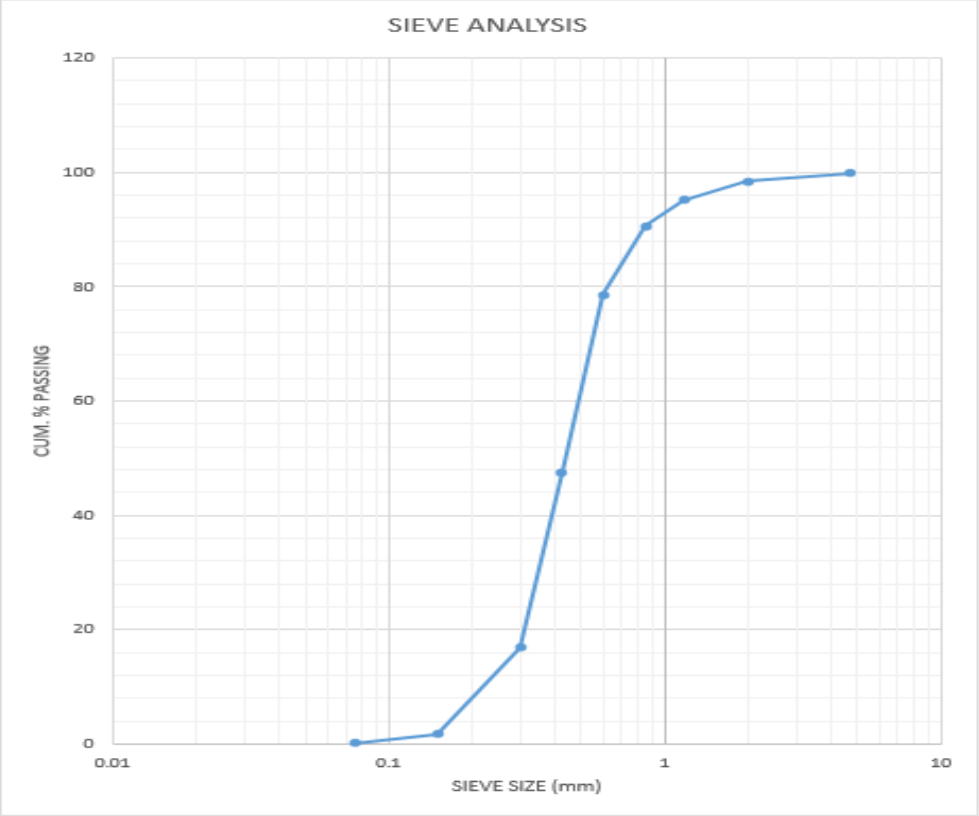

Figure 5: Particle size distribution for fine aggregate

3.2 Bulk density

The bulk density of the hollow sandcrete blocks at 28 days under air curing conditions is presented in Figure 6. The results show a clear influence of both web thickness and cement-to-sand (C:S) mix ratio on the density of the blocks. Across all mix ratios, bulk density increased with increasing web thickness from 20 mm to 50 mm. This trend is expected because thicker webs increase the net cross-sectional area of solid material within the block, thereby reducing the volume of voids and raising the overall mass per unit volume. The highest bulk densities were recorded for blocks with 50 mm web thickness, while the lowest values occurred at 20 mm web thickness.

The cement content also had a significant effect on bulk density. Blocks produced with the richest mix ratio (1:12) consistently exhibited the highest bulk density values, reaching approximately 2000 kg/m³ at web thicknesses of 25 mm, 40 mm, and 50 mm. In contrast, the leanest mix (1:20) produced the lowest densities, generally ranging between 1650 and 1700 kg/m³ across the different web thicknesses. This difference is attributed to the higher cement paste content in richer mixes, which fills inter-particle voids more effectively and contributes to a denser matrix. Intermediate mix ratios (1:14 and 1:16) showed bulk density values lying between those of the 1:12 and 1:20 mixes. For example, at 40 mm web thickness, the 1:12 mix achieved nearly 2000 kg/m³, while the 1:16 mix recorded approximately 1800 kg/m³ and the 1:20 mix remained below 1700 kg/m³. It is noteworthy that even at the thinnest web thickness (20 mm), the bulk density remained above 1650 kg/m³ for all mixes, indicating that the blocks generally fall within the acceptable range for lightweight to normal-weight masonry units. However, the significant drop in density observed with leaner mixes and thinner webs suggests that manufacturers who

excessively reduce web thickness or use very lean mixes (such as 1:20) compromise the compactness and potentially the long-term durability of the blocks.

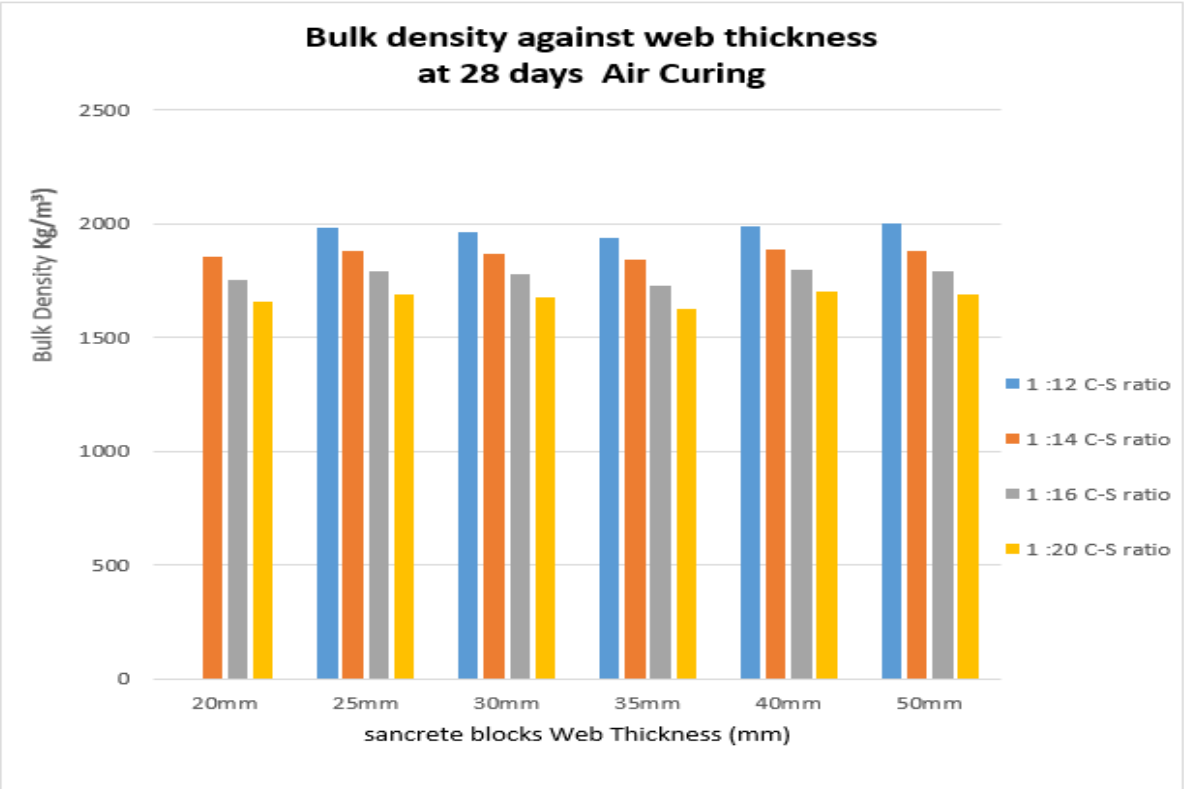

Figure 6: Bulk Density against web thickness of samples

3.3 Water Absorption Capacity

The water absorption of 28-day air-cured hollow sandcrete blocks (Figure 7) decreased markedly with increasing web thickness and richer cement-to-sand mix ratios. Values ranged from 230.60 kg/m³ (35 mm web, 1:12 mix) to 289.34 kg/m³ (20 mm web, 1:20 mix). Blocks with web thicknesses of 35 mm and above, particularly when produced with 1:12 to 1:16 mixes, generally satisfied the ASTM C140 (2001) maximum limit of 240 kg/m³, indicating lower porosity and improved resistance to moisture ingress. Thinner webs (20–30 mm) and the leanest 1:20 mix consistently exceeded the limit, reaching as high as 289.34 kg/m³. These trends demonstrate that thicker webs reduce the hollow volume and increase the solid cross-sectional area, thereby limiting water uptake, while higher cement content produces a denser matrix with fewer interconnected pores. The findings align with previous studies showing that water absorption in sandcrete blocks is highly sensitive to both geometric parameters and mix proportions. Olagunju and Raheem (2021) reported a clear inverse relationship between web thickness and water absorption, with values dropping from 24.5% at 15 mm webs to 18.8% at 35 mm webs. Similarly, several quality assessment studies in Nigeria have documented absorption rates frequently exceeding 12–18% in commercially produced blocks due to lean mixes (typically 1:16 to 1:20) and inadequate compaction (Nwaigwe et al., 2015; Odeyemi et al., 2018). By achieving absorption values below 240 kg/m³ with optimised web thickness (≥35 mm) and richer mixes, the present study demonstrates a practical approach to producing more durable sandcrete blocks suitable for external walls in Nigeria's humid tropical environment, addressing a common deficiency observed in local manufacturing practices.

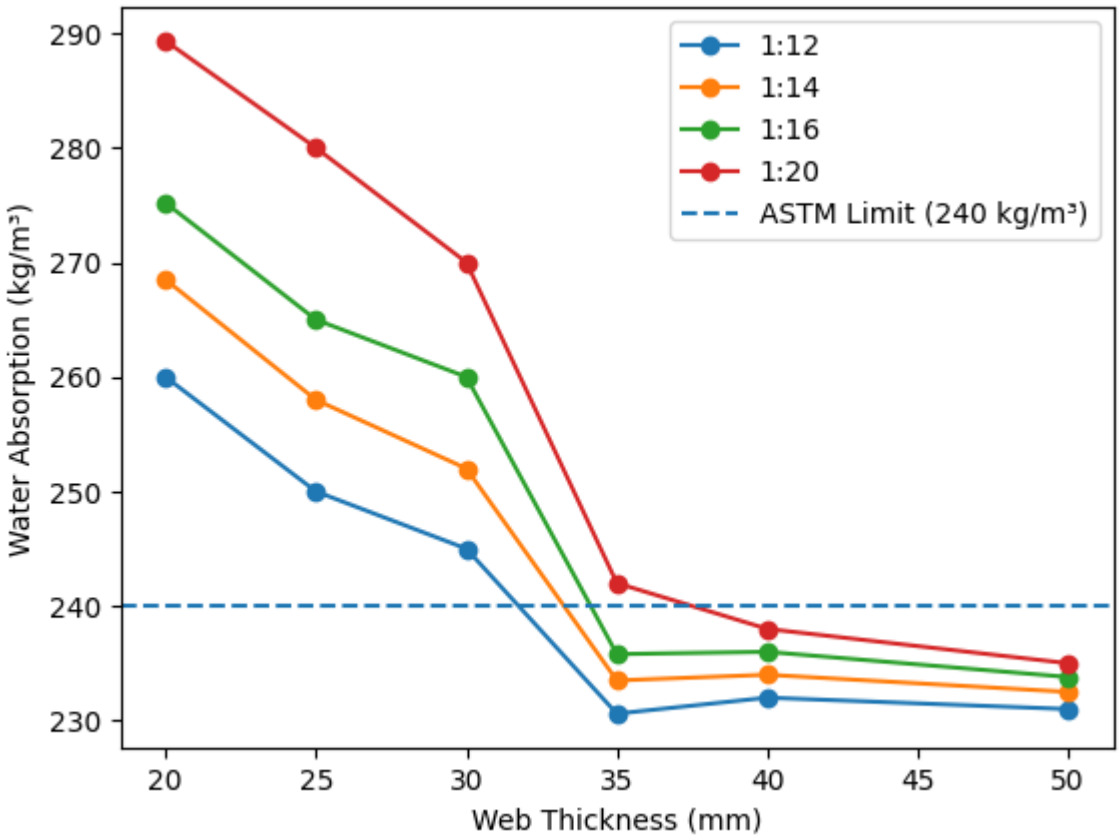

Figure 7: Water absorption of 28-day air-cured hollow sandcrete blocks

3.4 Compressive Strength Test Results

The compressive strength of sandcrete blocks was evaluated at 7, 14, and 28 days under three curing regimes: air curing, water sprinkling, and water submersion. The results are summarized below.

3.4.1 Air-Cured Blocks

For the air-cured specimens (Figure 8), the 28-day compressive strength ranged from as low as 0.59 N/mm² for the 20 mm thick block with a 1:20 mix ratio to a maximum of 2.88 N/mm² for the 50 mm block with a 1:12 mix ratio. At lower thicknesses, particularly 20 mm and 25 mm, strength values remained below the minimum requirement of 2.1 N/mm², even for relatively richer mixes. For instance, at 20 mm thickness, the strength varied between 0.59 N/mm² and 1.60 N/mm², indicating inadequate load-bearing capacity. At 30 mm thickness, strength improved moderately, ranging from 0.95 N/mm² for the 1:20 mix to 1.75 N/mm² for the 1:12 mix, still falling short of the 2.1 N/mm² requirement across all mix ratios. However, as the web thickness increased to 35 mm, the strength improved significantly, reaching 2.30 N/mm² for the 1:12 mix and 2.10 N/mm² for the 1:14 mix, both satisfying the required standard. Further increases in thickness to 40 mm and 50 mm resulted in strengths of up to 2.60 N/mm² and 2.88 N/mm², respectively, confirming the importance of section thickness in enhancing structural performance under air curing, which coincides with findings with Olagunju & Raheem (2021).

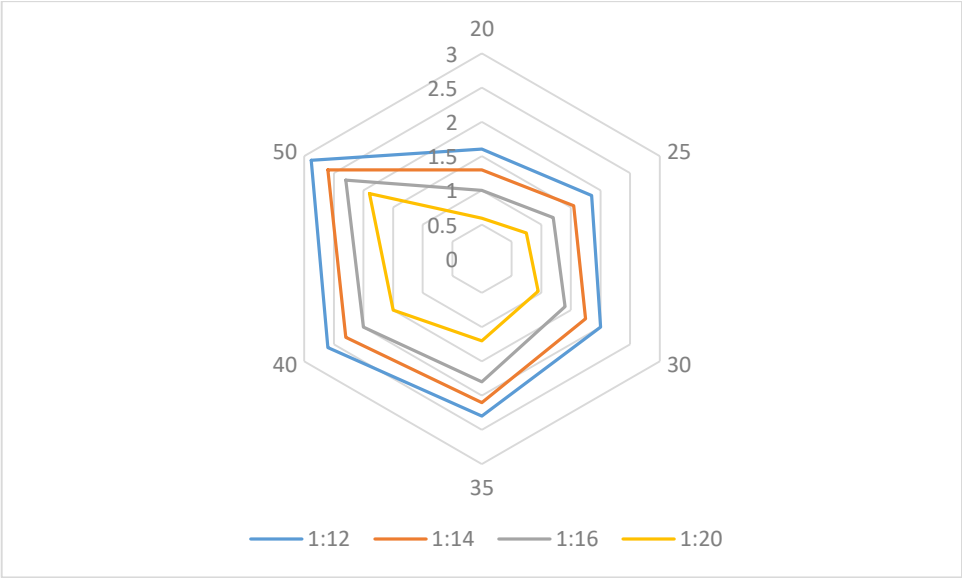

Figure 8: Compressive strength of Air-Cured Blocks

3.4.2 Water-Sprinkled Blocks

A similar pattern was observed for the water-sprinkled blocks, although the strength values were slightly lower at the lower thicknesses due to intermittent curing (as depicted in Figure 9). At 28 days, compressive strength ranged from 0.49 N/mm² for the 20 mm block with a 1:20 mix ratio to 2.88 N/mm² for the 50 mm block with a 1:12 mix ratio. At 30 mm thickness, strengths remained below the required limit, with values such as 1.95 N/mm² for the 1:12 mix and 1.70 N/mm² for the 1:14 mix. However, at 35 mm thickness, the strength increased to 2.25 N/mm² for the 1:12 mix and 2.05 N/mm² for the 1:14 mix, indicating that only the richer mix fully met the requirement. At higher thicknesses of 40 mm and 50 mm, strengths consistently exceeded the minimum standard, with values ranging from 2.25 N/mm² to 2.88 N/mm², demonstrating improved hydration compared to air curing.

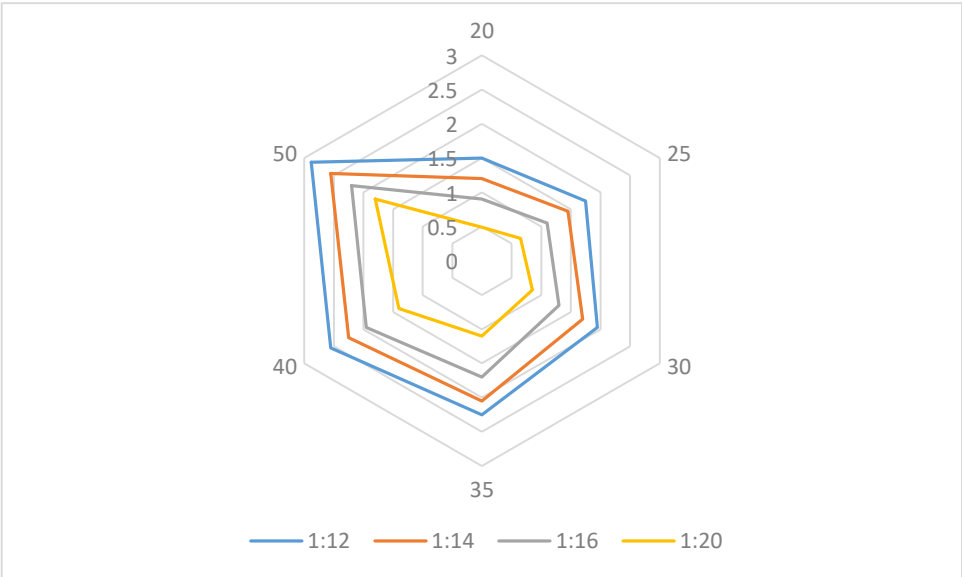

Figure 9: Compressive strength of water-Sprinkled Blocks

3.4.3 Water-Submerged Blocks

The water-submerged curing regime produced the highest compressive strength values across all thicknesses and mix ratios, confirming its effectiveness in promoting complete cement hydration (Figure 10). At 28 days, the strength ranged from 1.04 N/mm² for the 20 mm block with a 1:20 mix ratio to 2.78 N/mm² for the 50 mm block with a 1:12 mix ratio. Even at lower thicknesses, performance was notably improved; for example, at 25 mm thickness, the strength reached 2.00 N/mm² for the 1:12 mix, approaching the required limit. At 30 mm thickness,

strength values ranged from 1.20 N/mm² for the 1:20 mix to 2.20 N/mm² for the 1:12 mix, with the richest mix approaching the minimum requirement. At 35 mm thickness, the strength values of 2.45 N/mm² (1:12 mix) and 2.20 N/mm² (1:14 mix) clearly exceeded the minimum requirement, while at 40 mm and 50 mm thicknesses, all mixes except the leanest approached or exceeded 2.1 N/mm², with peak values of 2.65 N/mm² and 2.78 N/mm², respectively.

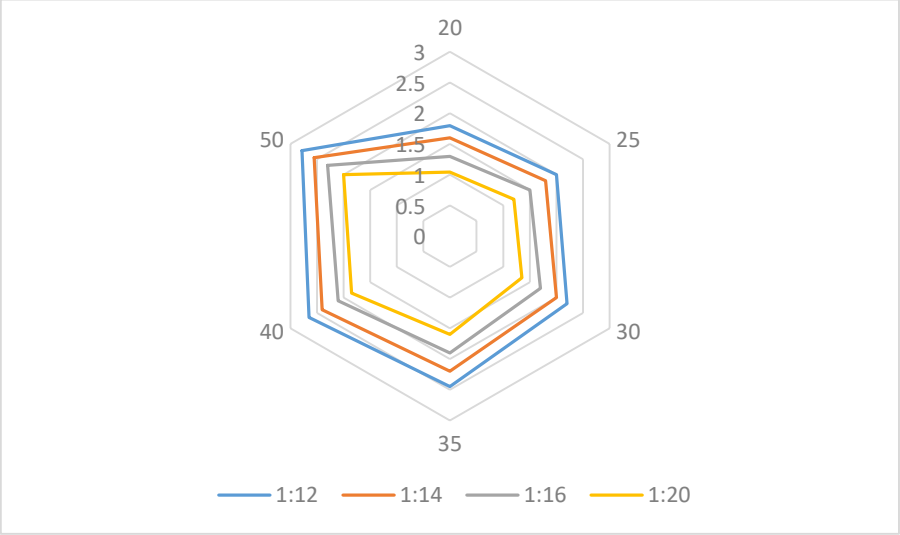

Figure 10: Compressive strength of water-Submerged Blocks

Across all curing conditions, the influence of mix ratio remained consistent, with compressive strength decreasing as the cement content reduced. The 1:12 mix ratio consistently produced the highest strength, followed by 1:14, 1:16, and 1:20. For example, at 50 mm thickness under submerged curing, the strength decreased from 2.78 N/mm² (1:12) to 2.55 N/mm² (1:14), 2.30 N/mm² (1:16), and 2.00 N/mm² (1:20). This trend reflects the critical role of cement in improving bonding, reducing porosity, and enhancing load transfer within the block matrix. Blocks with 20 mm and 25 mm web thicknesses did not meet the load-bearing strength requirement and should be restricted to non-load-bearing walls.

4.0. Conclusion

Based on the experimental investigation of the influence of web thickness on the properties of nine-inch sandcrete hollow blocks, the following conclusions are drawn:

1. Web thickness is a primary determinant of a block's engineering properties; increasing it from 20 mm to 50 mm significantly improves compressive strength and bulk density while reducing water absorption. This improvement in performance is driven by a reduction in internal void content and better material continuity, which optimizes load-bearing capacity and lowers permeability.
2. Blocks with web thicknesses of 35 mm, 40 mm, and 50 mm met the 2.1 N/mm² compressive strength criterion at 28 days, with 35 mm representing the experimental lower performance boundary. However, in accordance with NIS 978:2017, the prescribed minimum web thickness for 9-inch (225 mm) load-bearing blocks remains 50 mm, which this study confirms provides a reliable structural safety margin.
3. Blocks with 20 mm and 25 mm web thicknesses consistently failed to meet structural standards and should be restricted to non-load-bearing use only.
4. Thinner webs (20–25 mm) exhibited high porosity with water absorption rates exceeding the ASTM C140 limit of 240 kg/m³, whereas thicker webs (35–50 mm) generally satisfied the standard, indicating superior durability and resistance to moisture.
5. The cement–sand ratio is critical, with richer mixes (1:12) producing the highest strength and density, following a clear performance hierarchy of 1:12 > 1:14 > 1:16 > 1:20.

Curing regimes significantly impact strength development; water-submerged curing provides the best results due to continuous hydration, followed by water sprinkling, while air curing remains the least effective. The most effective combination for high-performance load-bearing blocks was found to be a 50 mm web thickness paired with a 1:12 cement–sand ratio and water-submerged curing.

5.0 Recommendation

Based on the conclusions above, the following recommendations are made for the production and application of nine-inch sandcrete hollow blocks:

1. Minimum Web Thickness for Structural Use: Sandcrete hollow blocks intended for load-bearing walls should have a minimum web thickness of 50 mm in accordance with NIS 978:2017 standards, as this study confirms that 50 mm webs provide a reliable structural safety margin beyond the experimentally observed lower performance boundary of 35 mm.
2. Mix Proportion for Optimum Strength: A cement–sand mix ratio of 1:12 is recommended for structural-grade sandcrete blocks, as it provides an optimal balance between compressive strength, durability, and economy.
3. Preferred Curing Method: Water sprinkling is recommended as the primary curing method for commercial block production in Nigeria, as it is practical at industrial scale and delivers adequate hydration for consistent strength development. Water-submerged curing, while producing the highest strengths under laboratory conditions, is impractical for large-scale manufacturing and is better suited to controlled or research settings. Air curing should be avoided for all structural applications.
4. Control of Water Absorption: For blocks to be used in external walls, manufacturers should ensure that water absorption values do not exceed 240 kg/m³ (ASTM C140 limit). Adequate compaction and sufficient cement content are critical to achieving this target.
5. Quality Control and Compliance: All block manufacturers should comply with the Standards Organization of Nigeria (SON) guidelines *(*NIS 978:2017*)* on block dimensions, web thickness, and compressive strength classifications. Regular quality testing should be institutionalized at the production level.

Further Research

1. Future studies should explore the influence of other physical and structural parameters, such as tensile strength, thermal conductivity, and durability under environmental exposure.
2. Experimental investigations should also be extended to six-inch hollow sandcrete blocks and to other curing methods, such as steam and membrane curing, for comparative evaluation.

References

Adisa, M. A., Badmus, N. I., Wuraola, K. F., Olasunkanmi, O. E., & Onaolapo, T. O. (2026). Exploring Sustainable Alternatives in Concrete: A Study on Recycled Aggregates, Palm Oil Fibers, and Coconut Shell Waste. In M. Posani & S. Singh (Eds.), *RILEM Youth Symposium 2025* (pp. 279–294). Springer, Cham. https://doi.org/10.1007/978-3-032-14652-6_22

Akanbi, T. Y., Waziri, J. A., & Brown, D. I. (2022). Properties Assessment and Application of Regression analysis on the compressive strength of Hollow Sandcrete Blocks. *FUOYE Journal of Engineering and Technology*, *7*(4). https://doi.org/10.46792/fuoyejet.v7i4.908

ASTM-C140. (2017). Standard Test Methods for Sampling and Testing Concrete Masonry Units and Related Units. In *American Society for Testing and Materials* (Vol. 04).

BS EN 771-3. (2011). Specification for masonry units Part 3 : Aggregate concrete masonry units (Dense and lightweight aggregates). In *BSI Standards Publication*.

BS EN 772-1. (2011). Methods of Test for Masonry Units Part 1 : Determination of Compressive Strength. *BSI Standards Publication*.

BS EN 933-1:2012. (2012). Tests for geometrical properties of aggregates Part 1 : Determination of particle size distribution — Sieving method BS EN 933-1:2012. In *International standard* (Vol. 3, Issue 1).

Burgueño, R., Liu, X., & Hines, E. M. (2010). Inelastic web crushing capacity of high-strength-concrete structural walls. *9th US National and 10th Canadian Conference on Earthquake Engineering 2010, Including Papers from the 4th International Tsunami Symposium*, *6*.

Burgueño, R., Liu, X., & Hines, E. M. (2014). Web crushing capacity of high-strength concrete structural walls: Experimental study. In *ACI Structural Journal* (Vol. 111, Issue 2). https://doi.org/10.14359/51686515

Gana, Braimoh, Momoh, & Amodu. (2022). Comparing the Characteristics Strength of Hollow Sandcrete Blocks Comparing the Characteristics Strength of Hollow Sandcrete Blocks Produced Manually in Landmark University and Machine C Comparing the Characteristics Strength of Hollow Sandcrete Blocks…. *International Journal of Agricultural Research and Food Production*, *7*(3). https://casirmediapublishing.com/wp-content/uploads/2023/04/Pages-26-42-2023-6226.pdf

Negrin, I. A., & Chagoyén, E. L. (2022). Economic and environmental design optimisation of reinforced concrete frame buildings: A comparative study. *Structures*, *38*. https://doi.org/10.1016/j.istruc.2022.01.090

Neville, A. M. (2011). Properties of concrete-5th edition. In *Concrete Mix Design, Quality Control and Specification*.

Nwaigwe, D. N., Ogwu, E. A., Ugonna, M., Atakpu, O., & Edom, A. (2015). Evaluation of the Quality of Hand Moulded Sandcrete Block in Owerri, Imo State, Nigeria. *Journal of Sustainable Development Studies*, *8*(2).

Odeyemi, S. O., Akinpelu, M. A., Atoyebi, O. D., & Orire, K. J. (2018). Quality assessment of sandcrete blocks produced in Adeta, Kwara State, Nigeria. *Nigerian Journal of Technology*, *37*(1). https://doi.org/10.4314/njt.v37i1.7

Olagunju, O. S., & Raheem, A. A. (2021). Effects of Hollow Sizes on the Properties of Sandcrete Blocks. *Journal of Veterinary and Biomedical Sciences*, *7*(2). https://doi.org/10.36108/laujoces/1202.70.0260

Rasheed, A., & Akinleye, T. M. (2016). The effects of production methods on the compressive strength of hollow sandcrete blocks. *Journal of Materials and Engineering Structures*, *3*.

Robert, U., Etuk, S., Agbasi, O., & EKong, S. (2020). Properties of Sandcrete Block Produced with Coconut Husk as Partial Replacement of Sand. *Journal of Building Materials and Structures*, *7*(1). https://doi.org/10.34118/jbms.v7i1.710

Robert, U. W., Etuk, S. E., Agbasi, O. E., Okorie, U. S., & Lashin, A. (2025). Hydrothermal properties of sandcrete blocks produced with raw and hydrothermally-treated sawdust as partial substitution materials for sand. *Journal of King Saud University - Engineering Sciences*, *37*(8). https://doi.org/10.1007/s44444-025-00065-z

Samson Odeyemi, Mohammed Adisa, Kabir Kenku, Samad Yusuf, Mutalib Amuda, & Stephen Oladejo. (2024). Comparative Analysis of Statistical Models for Predicting the Properties of Agricultural Waste-Enhanced Sandcrete Blocks. *Journal of Civil Engineering and Urbanism*, *14*(3S), 142–148.

Shen, W., Zhao, Y., Li, L., Qiu, Y., & Liu, E. (2019). Assessment of residual ultimate strength on plate girders with web opening under compression-bending loadings. *Ocean Engineering*, *187*. https://doi.org/10.1016/j.oceaneng.2019.106147

SON. (2017). *NIS 978:2017 – Standard for Sandcrete Blocks*.

SON. (2021). *NIS 74:2021 – Standard for Sandcrete Blocks*.