UJEAS

UNIZIK JOURNAL OF ENGINEERING AND APPLIED SCIENCES

UNIZIK Journal of Engineering and Applied Sciences 2(3), December (2023), 427-440
Journal homepage: https://journals.unizik.edu.ng/index.php/ujeas
PRINT ISSN: 2992-4383 || ONLINE ISSN: 2992-4391

Development and characterization of a thermoelectric generator power system for charging mobile phones

Igwilo O.C [1*], Mathurine G[2], Onyegbadue I.A[3] and Azike R.U [4+]
[1,2,3] Department of Electrical/Electronics Engineering,
College of Engineering, Igbinedion University, Okada, Edo State, Nigeria.
[4+]Department of Chemical Engineering,
College of Engineering, Igbinedion University, Okada, Edo State, Nigeria.
[*]Corresponding Author's E-mail: ossy.igwilo@iuokada.edu.ng

Abstract
The masses in urban and rural areas in Nigeria for the past decades have experienced epileptic and dwindling power supply. Moreover, due to this challenge of epileptic power supply, there has been some level of impediment to charge mobile phones, thus disrupting communication between the phone users. The focus of this work is to develop and characterize a thermoelectric power generator system with the associated electrical power system components to charge a mobile phone. This work method mainly deployed the use of Thermoelectric Generator (TEG) power system, two TEG systems in series connection with three heat sources; hot plate or Charcoal, manifold and exhaust. The TEG system was connected to a voltage regulator power system using an integrated circuit device and a bias resistor with the help of a variable resistor to regulate the voltage output. Two capacitors were utilized to smoothen the direct current (DC) ripples and the diode was deployed after the TEG units to rectify the TEG output voltage been fed into the power regulator circuit. A range of variables was targeted which pegged the threshold charging voltage at 6.19 Volts using the charcoal or hot plate as heat source. The charging voltage range was obtained using a digital multimeter which was pegged at 6.19Volts to 6.30 Volts. The open circuit voltage was pegged at 8.9 Volts. A maximum power of 14.241 Watts was produced. It was concluded that the mobile phone was able to charge up using a charcoal or hotplate waste heat. The charcoal or hot plate experiment was compared with manifold and exhaust heat source. The above charcoal or hot plate heat source was preferable over the manifold and exhaust. The automobile manifold and exhaust waste heat produced a maximum voltage of 3.10Volts and 2.058 Volts respectively.

Keywords: TEG 1-241-1.4-1.2, Development, characterization, thermoelectric generator, mobile phone, power.

1. Introduction

The masses in Urban and rural areas in Nigeria for the past decades have been facing epileptic and dwindling power supply of which the charging of their phones have been a challenge especially for commuters who might be traveling all day. These commuters phone battery level drastically goes down as a result of calls or the need to use their phone for other purposes. As a result of the battery voltage drop, they might not be able to contact their loved ones after reaching their destination due to flat batteries as a result of much power dissipation. Thus, this work looked at the option of providing the solution to this challenging issue that will use the heat dissipated from the automobile car (Manifold and exhaust) where the USB adapter will be connected to receive the output form the voltage regulator circuit after been connected to TEG system. This work strategy was modified due to the fact that the temperature difference using the heat from the manifold or exhaust might not be feasible enough. Therefore, this work will use the waste heat either from hot clean charcoal system or a simulated environment with the hot plate will be provided.

The thermocouple device is the thermal electric device which is the quintessential component of this system that will convert the heat energy, (in between the exhaust and engine point) to electrical energy. All other components will be incorporated to produce a quality dc voltage output. Thermoelectric generators and thermocouples have different industrial applications for temperature measurement, such as the monitoring and control processes, to ensure safety, product quality and regulate their properties. It also has its application in industries including nuclear plants for recovery of waste heat and has also been applied in automobiles for the same purpose. (Nugraha etal., 2020) Another aspect of thermocouples is to understand how they operate under homogenous conditions. The thermoelectric inhomogeneity of wires is one of the main components of the measurement uncertainty when using thermocouples. During calibration, it is necessary to determine how much the in-homogeneities affect the measurement result (Nugraha etal., 2020). Inhomogeneities are known to develop within thermocouple elements exposed to elevated temperatures, resulting in temperature measurement errors. This is the reason why it is expedient to use the same type of thermocouple or thermoelectric generator with probably same length for design and calibration. The temperature gradient exposed to mechanical processes can affect Seebeck coefficient drift for base metal thermocouple along the length of the thermocouple that vary according to the nature and magnitude of the processes. (Nugraha etal., 2020).

This work uses the principle of Thermoelectric generator system having similar homogeneous properties and exploiting the waste heat in an automobile to charge a phone. The thermocouple or a thermoelectric generator is a thermal- electric device that converts thermal energy to electrical energy. The device is very sensitive to the temperature difference which can generate electromotive force (emf). Hence, the emf is proportional to the temperature gradient. There are three scientific theoretical effects associated with the thermocouple, these are; the Seebeck Effect, the Peltier Effect and the Thompson Effect which are respectively represented by; 1) The law of intermediate metals, 2) the law of homogenous metals and 3) the law of intermediate temperature. (Ravindra etal., 2018).

The statement of the research problem of this work has identified a gap in inadequate power supply in rural areas and semi-urban areas to charge mobile phones. This work will affect the scope which will improve telecommunication in the case of the indigenes. The significance of this study comes from the premise of the fact as a result of the dwindling power supply in urban and rural areas, this work can help to bridge the gap for the lack of adequate power especially in rural areas using a thermal-electric source that requires no pre-existing energy source. It should be noted that the technology for this research will be relatively in-expensive, easily manufactured and affordable for the masses. The aim of this work is to develop and characterize a thermal-electric power system with other associated electrical components to charge a mobile phone by exploiting the waste heat from an automobile or clean charcoal using hot plate.

The specific objectives of this work are; identification and Selection of the suitable thermal-electric device and other components; Preliminary Design of experiment for the Selection, characterization and calibration of the thermoelectric generator and other components to produce voltage and power under simulated environment to apply in the hot coal, hot plate or any strong heat energy source**;** the Design and Implementation of the experimental stage for the thermal electric device and other components using a voltage regulator circuit by exploiting the hot and cold heat source to produce voltage to charge a mobile phone exploiting the hot points of the manifold, Exhaust and hot plate. Finally, Comparison of data result from Manifold, exhaust and charcoal or electric hot plate heat source. For the innovative aspect of this work or Contribution to knowledge**; t**his is the fourth known work to be published after experimental findings, as there are only three works done on this particular module TEG 1-241-1.4-1.2 (Marpaung etal., 2023). This is actually was an innovative work, as the reviewed work data that was generated from the existing literature, was

carried out exploiting geo thermal heat which is a different aspect. It also a conceptualized experiment that might never have been thought to be conceived. For its application in rural areas, it will also be significant and economical, unlike other works that can incur more cost on matters of installation.

Literature

Background: History and Principle of Operation

In 1821, a German Physicist Thomas Johann Seebeck made a discovery in which a magnetic needle held in close proximity with a circuit made up of two dissimilar metals got deflected when one of the dissimilar metal junctions was heated. At this time, Seebeck referred to this consequence as thermo-magnetism. The magnetic field he observed was later shown to be due to thermo-electric current. In practical reality of its use, the voltage generated at a single junction of two different types of wire, is what was of interest as this can be used to measure temperature at very high and low values. The magnitude of the voltage depends on the type of wire being utilized. Generally. the voltage is in the microvolt range and care must be taken to obtain a usable measurement. Although, very little current flows, however power can be generated by a single thermocouple junction. Thus, the use of coupling multiple thermocouples together to improve the power is very common.

Review of works done using thermocouple or thermoelectric generator to generate power

A reviewed work from a journal article conference paper used the waste heat from a cook stove to generate power of 5W, using a thermal- electric generator to power an electric fan and pass it through an LI-on battery to run a 12 Dc fan, lighting a LED Light and charging a mobile phone. It should be noted that the fan was to cool the heat sink of the Thermal Electric Generator in other to improve its performance and thus also improving the performance of the cook stove. (Risha etal., 2015). The gap in this work could not produce enough power to charge the mobile phone.This major work was able to generate a maximum roughly around 14 Watts.It also worked on improving the DC signal which this reviewed work did not address.

The main objective of this reviewed work was to design a A TEG power system that uses heat from a heat collector to convert it to power to charge a phone.This work produced 7.7 Watts at 138ºC but my work gap wil produce a higher power at a low temperature range (Elghool etal., 2018). It can be observed that there was a gap in the above reviewed work. The voltage obtained, was not adequate enough to power a mobile phone which uses exactly 3.5Volt. The diagram on the left side of the work implies that the output could be fed into a DC-DC converter to step up the volts to charge a phone. This work did not identify the gap of improving the dc signal. This reviewed work did not have the adequate power and voltage to charge a mobile phone. This current proposal will address this gap.

This reviewed work carried out the research using a high temperature; however, the calibration and simulation experiment can achieve a higher output at a lower temperature less than 110° C with better efficiency which will be peculiar to this main work Although phone charged successfully relatively a bit lesser than 45 W. It used a higher operating temperature which my work output can achieve with a lesser operating temperature (Elghool etal., 2018). It can be finally concluded from this work, though power was generated enough to charge a phone, however it was observed there is need for improvement in heat sink design and adding of more electrical loads to get better, adequate and more feasible results. (Elghool etal., 2018).

This reviewed work used a thermocouple which was developed using 10 SP 1848 27145- SP Modules which is similar to the TEG for this research thesis. They generated a voltage of 20 V at 300 seconds with cold side at 120 º C and hot side at 300 º C The gap in this work had to use many TEG modules which would have incurred a lot of cost of materials. The cool side of the TEG System in an automobile will be around 90 º C. It may not be feasible to apply in automobile environment but it will work in the charcoal environment (Onoroh etal., 2021). Also, the work gap used ten modules to obtain a useful voltage incurring a lot of cost. My work used few modules to obtain a significant result on the condition of reduced cost.

The Governing Equations for the Thermoelectric Generator Modules and Modelling for TEG System

Output power P_{out} and energy conversion efficiency are the primary parameters to characterize TEG performance. They are heavily influenced by essential factor such as temperature of heat source and heat sink, thermoelectric physical properties, thermocouple geometrics, thermal and electrical contact properties and load factor. Therefore, it is expedient to build physical model for formulating these factors in a concise manner to model the transfer of heat to electrical energy in relation to efficiency of the TEG design. At present many significant works have been undertaken

for modelling device level TEG precisely (Kim, 2013) (Lee, 2013) (Xiaolong etal., 2013). The holistic literature (Cheng, 2016) reviewed the governing equations of the Thermoelectric Generator in order to model the performance and efficiency of thermoelectric device. There are three main effects that affect a thermoelectric generator. In this reviewed work, Seebeck effect, Peltier effect, Thomson Effect and Joule conduction heat are formulated in thermoelectric generation module model (Cheng, 2016).

The Seebeck Effect converts Thermal Energy into Electrical Energy which makes this technology suitable for harvesting energy (Ravindra etal., 2018). The Peltier Effect discovered that a small heating or cooling was produced depending on the direction of the current (Ravindra etal., 2018). William Thomson discovered the Thomson Effect which recognized the relationship between the two effects (Ravindra etal., 2018). By simplifying the model, analytic expressions of the output power and energy efficiency are quintessential factors for enhancing the output power. Then an experimental setup is built to measure the output power and validate the model. This reviewed work used ANSYS Software for modelling the TEG system with its parameter and efficiency equations (Ravindra etal., 2018).

Thermoelectric Generator Cell Structure

TEG cell structure consisting of thermoelectric generator is shown Fig 1.1. & Fig 1.2. The structure of the cell consists of basic Thermoelectric effects including Peltier and Joule heat and a circuit with load R_L are included. The p and n Thermo-elements are cuboids of the same thickness and bridged by an electrode in series.

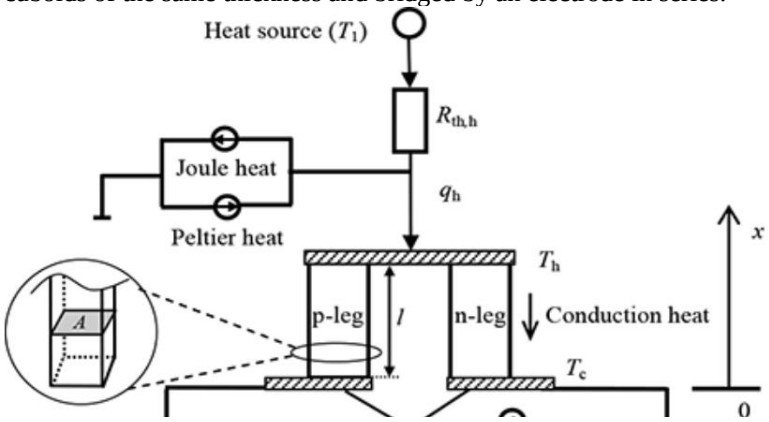

Fig 1.1 part1 Schematic diagram of TEG Cell structure (Cheng, 2016)

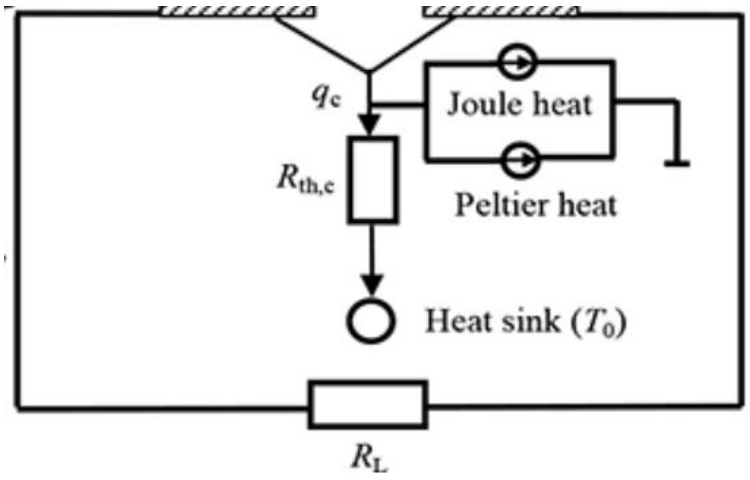

Fig 1.2 Part 2 Schematic Diagram of TEG Cell structure with heat source (Cheng, 2016)

Practical devices usually make use of thermoelectric modules containing a number of TEG Cells connected electrically in series and thermally in parallel. Cross-sectional area and thickness of the thermocouple are marked as A and L. Subscripts 'n' and 'p' are used to differentiate conductivity type of thermoelectric elements. The temperature of heat source and heat sink is $T_1$and T_0 respectively. The Efficiency of the TEG is defined as:

$$\eta = \frac{Output\ power}{q_h} \quad (1)$$

Where q_h is the heat flow.

$$q_h = c_2^2[R_L + R_g]^2[\alpha^2\Delta T\frac{\{T_h(R_L+Rg\}-\frac{\varepsilon\Delta TRg\}}{c2}}{c_2(RL+Rg)^2} + \frac{\Delta TK_g}{c2} \quad (2)$$

$$C_2 = (1 + (R_{th,c} \times K_g) + (R_{th,h} \times K_G)) + \frac{((R_{th,l} \times T_1)+(R_{th,h} \times T_0)\}-\frac{\varepsilon\Delta TRg\}}{c2}}{R_L+R_g} \quad (3)$$

(Cheng, 2016)
Where R_L Is the resistance of the load or circuit
$R_{th,h}$ is the thermal resistance of the hot side.
$R_{th,c}$ is the hermal resistance of the cold side.
K_g is the Thmpson's coefficient.
R_g is the Electrical Resistance of the TEG Cell.
ΔT is the temperature difference between the heat source and the heat sink.
T_h is the temperature of the hot side.
T_0 is the temperature of the heat sink.
T_1 is the temperature of the heat source.
$\propto$ is the seebeck coefficient.
C_2 is a parameter for computing the heat flow q_h
To obtain the resistivity
U_{OC} is the voltage output of the thermocouple
U_{OC} = 8.9
And I is the current rating of the TEG System
The current from measurement = 1.97Amps

V= IR (Ohm's law)
Therefore the Electric resistance of the TEG = $R_g = \frac{U_{OC}}{I} = \frac{8.9}{1.97}$ =4.51 Ω (4)
Consider equation (4) above
$R_g = \frac{\rho l}{A}$ (5)
Where l is the length of the TEG which is 0.055m
and A is the cross-sectional area = $l \times b$=$0.055m \times 0.055m$ =0.003025 m^2
ρ is the resistivity.
Equation (5) becomes (6) making ρ subject of formular.
Therefore the resistivity = $\rho = \frac{R_g \times A}{l} = \frac{4.51 \times 0,003025}{0.055}$ = 0.24805 Ωm (6)

The Thomson coefficient of the TEG is given as= $K_g = \frac{\lambda \times A}{l}$ (7)
Where λ = Thermal conductivity which is = 2.18 (REES52, 2023)
And A=0.003025 m^2
And l = 0.055m
Therefore: $K_g = \frac{2.18 \times 0.003025}{0.055}$ =0.1199 $V.K^{-1}$

The Thomson coefficient = 0.1199 $V.K^{-1}$

From the experiment of the TEG series connection to the hot plate.
T_1 = Temperature of heat source= 118. 7 º C=118. 7 º+ 273 =391.7 K
While T_0 =Temperature of heat sink which equals= 88.7 º C= 88.7ºC+ 273=361.7 K

There is a thermal resistance between the thermo-element of the heat source $R_{th,h}$ =23.3/K.W^{-1}
And the thermal resistance of the thermo-elements of the heat sink $R_{th,c}$ = 31.5/K.W^{-1}
The load of the circuit also equivalent to $R_g = R_L$ =4.51Ω (Cheng, 2016)

Figure of merit
The Figure of merit is a numerical expression taken as representing the performance or efficiency of a given device, material, or procedure. This is the equation for how a TEG system performs using numerical representation which deviates from the normal efficiency standard, due to the fact the efficiency range of TEG device is the lower range. The formula for the figure of merit is given as:

$$Z= \frac{\alpha^2}{K_g \times R_g} = \frac{0.05^2}{K_g \times R_g} \quad (8)$$

Where α is the Seebeck coefficient which equals =0.05 V.K^{-1}
K_g is the Thmpson's coefficient
Where R_g is the Resistance of the TEG cell
And Z is equal to the Figure of merit or the equivalent of efficiency.

R_g= 4.51Ω
The Thomson coefficient is K_g
From equation 15 K_g = 0.1199 V.K^{-1}

Therefore;
Fo a single TEG The figure of merit= $Z= \frac{0.05^2}{0.1199_g \times 4.51_g} = \frac{0.0025}{0.540749}$
Z = 0.00462 which is the figure of merit for a single TEG system

From the reference literature (Cheng, 2016)
The conventional thermocouple has a low conversion efficiency which makes it costly. The power output depends on a temperature difference as well as the load. The efficiencies of these devices are low, usually around 4.5% to 7 % due to the limitations of the semi-conductor materials. The price of the thermocouple ranges from $10 to $50 for single individual modules including logistics. Many applications thus deploy multiple units which makes the cost an essential factor. Heat flow is necessary for the operation of this thermocouple device. In the absence of an available temperature difference, electricity will not be generated. The most important technical aspect is that the load connected to the thermal electric generator must appropriately be matched with the resistance of the device for maximum power transfer. The thermocouple has an efficiency between 4.5% and 7% which is only suitable for low power scale applications as they might not be suitable for large scale production except with innovative techniques to employ other auxiliary components. The thermo- electric power sources have consistently demonstrated their extraordinary reliability and longevity for deep space mission and exploration missions as well as Terrestrial or earthly applications where un-supervised operation in remote locations is demanded. Radioisotope thermo- electric generators have been in continual operation for more than 30 years using high temperature heat sources. They have no moving parts and make no vibrations. They are tolerant to extreme temperature, pressure, shock and radiation.

Selection of best Thermoelectric Generator
The best thermoelectric generator is the bismuth Telluride according common literature. There are different variations of the bismuth Telluride. In this work we used TEG 1-241-1.4-1.2 which is an offshoot of Bismuth Telluride.

2.0 Materials and methods
About four main experiment sections were carried out using different heat sources with the TEG series system: Hot plate or Charcoal, Manifold, Exhaust and finally then the design, coupling, assembling of the voltage regulator to improve the quality of the DC signal output form the TEG system. The first three main results of the heat sources were

then evaluated to check if it can provide enough voltage to charge a phone. A comparison of the three main experiments' results were also discussed.

2.1 TEG and Hot plate heat source Experiment

The TEG and hot plate experiment was done in an air-conditioned room to allow the hot region of the TEG to cool well for good performance. The heat sink was used as a shield and the TEG devices were embedded within it connected in series, where a voltage regulator circuit was also connected. The heat sinks also helped to conduct heat in and out of the TEG System. A multimeter was used to obtain the output of the TEG system. An adjustment was also carried out using the variable resistor to match the load for 5.0 Volts to ensure the voltage does not exceed the phone voltage rating, in order to avoid phone battery damage. Fig 2.1 shows the 2 TEG series connection with hot plate experiment.



Fig 2.1:2 Series TEG connection with out plate experiment set up (Field of authors)

2.2 TEG and manifold heat source Experiment

The experiment setting was then moved to an automobile where a binding wire was using to bind the TEG and heat sink to the manifold of the engine. The temperature of the heat source and heat sink was taken, together with the voltage output from the TEG and manifold heat source. Fig 2.2 shows the TEG connection, calibration and experiment design and development together with characterization of the TEG and manifold heat source experiment.



Fig 2.2 TEG series connection and Manifold Experiment setup (Field of Authors)

2.3 TEG and Exhaust heat source experiment

The same process was carried out for the exhaust experiment with binding wire. Due to poor visibility, the picture could not be obtained. Two temperature readings were obtained both for the heat sink and heat source. The multimeter was also connected to obtain the result of the voltage output for the experiment.

2.4 Design and Development of the voltage regulator power system

The thermoelectric device was placed on an aluminum slab, for protecting it from the hot plate and a heat sink was put in place for thermal conduction. The protective cables were used just to protect the wires from the thermocouple from burns. The electric plate was used to simulate how the engine heat profile will work. The output of the wire was then fed to a power system which was designed from scratch using a circuit board. The function of the circuit power system was to serve as a voltage regulator. The output of the thermoelectric device after the hot plate was been heated, was fed into the IN4007 diode due to the fact that the voltage signal was inverted. The negative terminal of the TEG was fed to the positive terminal of the circuit input. The positive terminal of the TEG was fed to the negative terminal of the circuit input point.

This is where the IN4007 diode comes in to regularize the circuit to ensure a dc voltage is produced. The battery charger circuit in which the LM317 Integrated circuit was connected to two capacitors which the first is 10 µF 25 Volts capacitor and the second capacitor of 220 µF 25Volts with the first the former fed into the central mid-point and the later connected to the right side just before the IN4007 Diode. The duty of these capacitors are to remove the ripples from the dc signals for more smoothened dc signal. A resistor is connected to the left leg of the LM 317 Device and the second leg is connected to the central pin where the 10 μF meets. The 330 Ω is a bias resistor and the 10 KΩ is a variable resistor for regulating the desired optimal voltage range and current by adjustment. Three main experimental heat sources (hot plate or charcoal, Manifold and exhaust heat source) were considered as mentioned in the first section of the method and connected to this voltage regulator circuit.

Fig 2.3 shows the block diagram of the methodology for the development and characterization of the TEG power system. Fig2.4 below shows the schematic diagram of the Thermoelectric Generator power system Circuit which was illustrated in a schematic diagram belo. The open circuit voltage of the phone was synchronized to cut-off with the diode green light at 3.5 volts. This will be further discussed in the result and discussion.

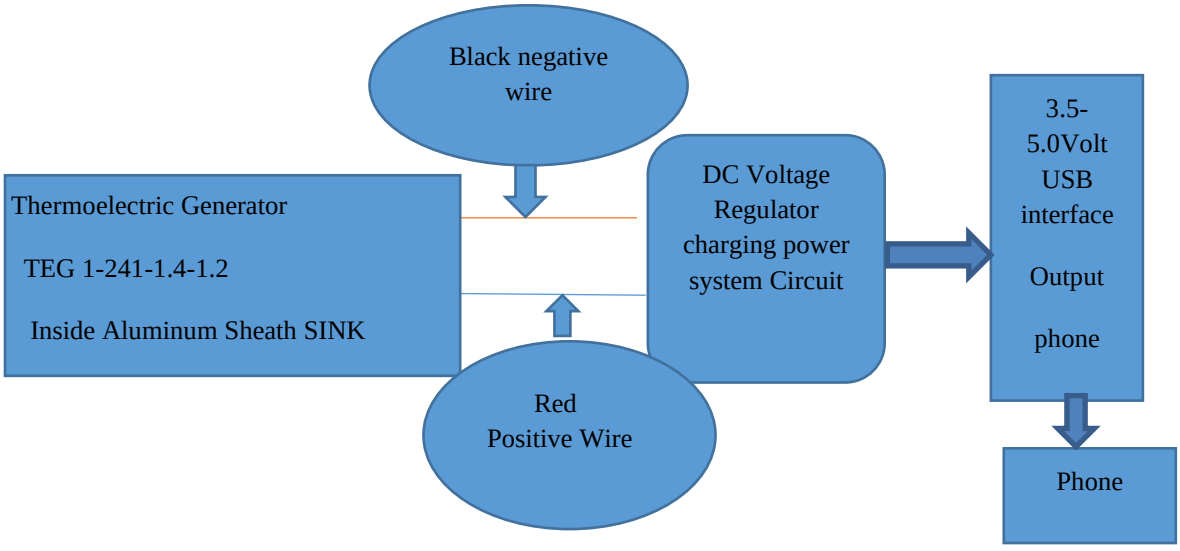

Fig 2.3 Circuit Block Diagram of the Thermoelectric Power system for Development, coupling and Characterization for charging device for Mobile Phone (Field of authors)

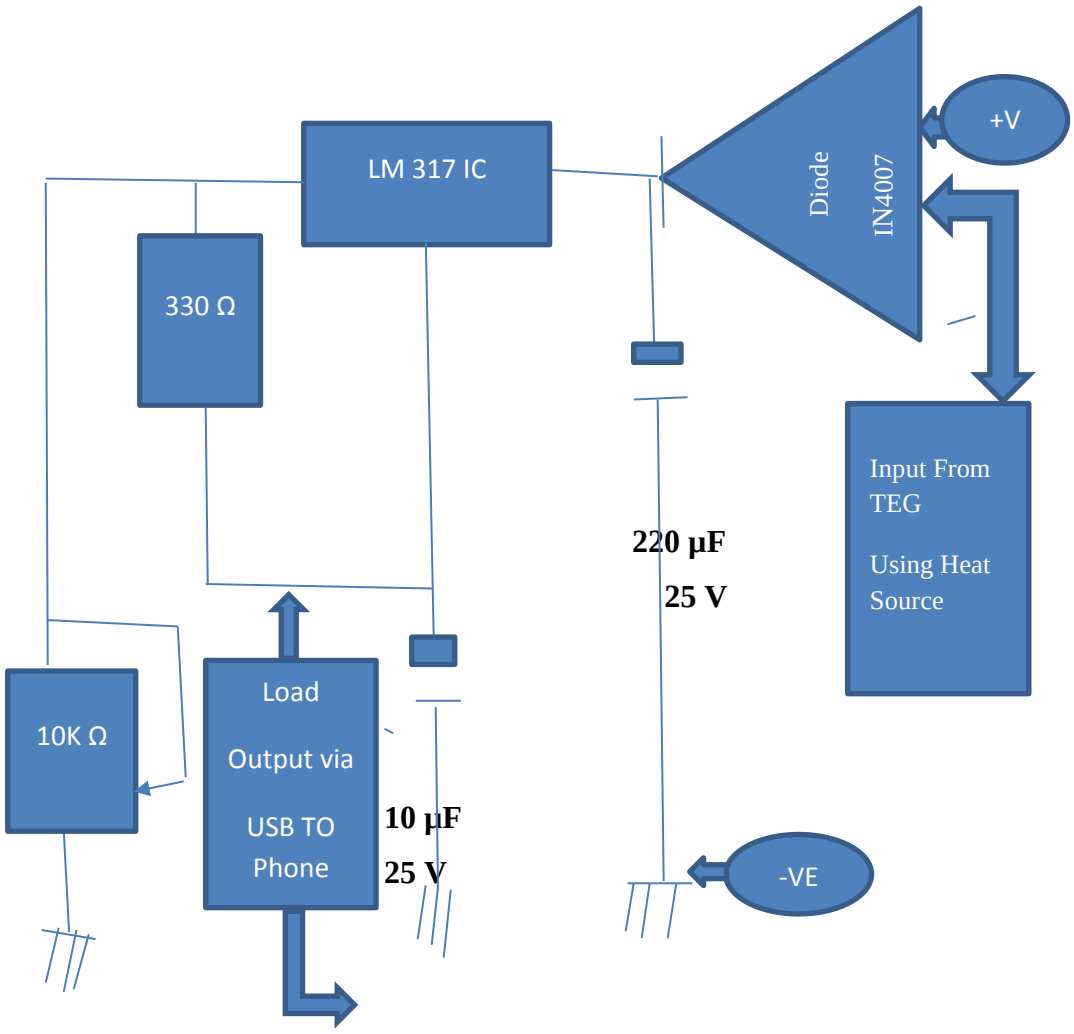

Fig 2.4 Schematic diagram of Design, coupling, calibration and characterization of Thermoelectric Generator (Field of authors)

3.0 Results and Discussions

3.1 Result of the Experimental findings

Below are the result finding of the experiments for the thermoelectric generator and the voltage regulator which makes the power system. These also are the findings of the pilot project and final simulation experiment of this work before been transferred to the automobile.

Four trial experiment was carried out as follows:

- Single Thermoelectric generator with voltage regulator circuit (load and power system) for the Temperature and voltage and current result.
- Two Thermoelectric Generators (TEG) in series with voltage regulator circuit (load and Power system) for temperature, and current data result.
- The two series TEG generator with no load for the temperature and data result.
- Power, temperature, voltage and current profile.

3.1.1 First main Experimental trial

Table 3.1 Table of Temperature and voltage for single Thermoelectric Generator with load and power system (Field of authors)

Temperature(º C)	Voltage(Volt)	Current(Amps)
28.7	0.003	1.35
38.7	0.45	1.35
48.7	1.27	1.35
58.7	1.98	1.35
68.7	2.77	1.35
78.7	3.51	1.35
88.7	4.5	1.35
98.7	5.02	1.35

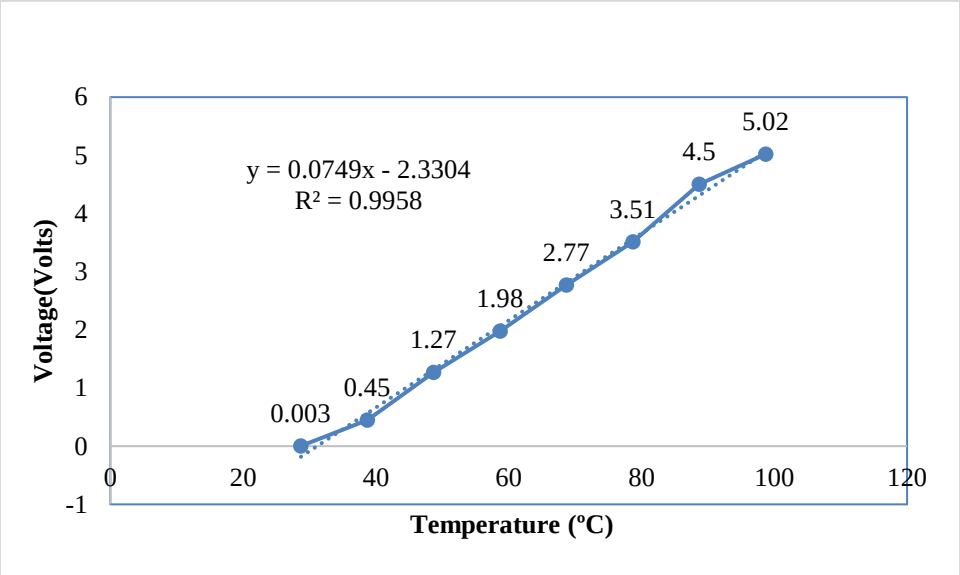

Fig 3.1 Graph plot of Voltage against Temperature for the single Thermoelectric Generator with load and power systems using Electric hot plate as heat source (Field of authors).

This is the table of result for single TEG and load power system in terms of temperature and voltage. The rated current is 1.35 Amps. For GSM phones in relation to my android the charger input brings out 1.55 Amps output and only 0.031 Amps is utilized by the phone.

Table 3.2 Table of Temperature and power for TEG Modules in series connection second trial Result (Field of authors)

Temperature(°C)	Power(Watts) Current 1.97 Amps
28.7	0.117
38.7	2.167
48.7	3.723
58.7	5.2008
68.7	6.895
78.7	10.737
88.7	11.2093
98.7	13.6521
108.7	14.241

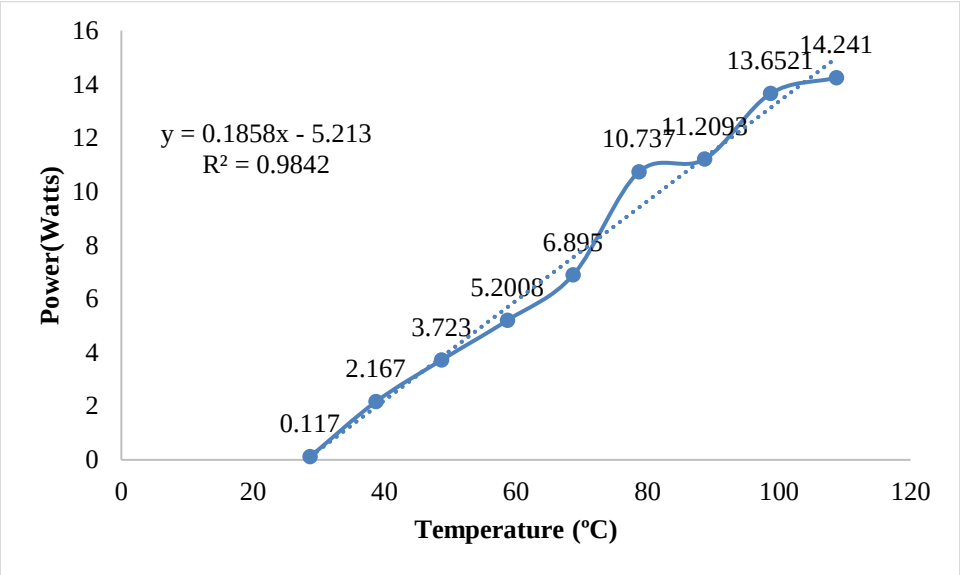

Fig 3.2 Table of power against temperature for Two TEG series connection using Electric hot plate as heat source (Field of authors)

Table 3.3 General result of Table of voltage, current and power measurement in real time and work experiment validation (Field of authors)

S/N	Real-time phone Quantity Measurement Phone Android Model(Samsung Galaxy A10s)	Value
1	Phone Maximum voltage.	5.0 Volt
2	Current Rating range	0.03Amps -0.031 Amps
3	Phone Power rating	4.4Watts- 4.6 Watts
4	Current Input from phone charger	1.67 Amps
5	Current input of the two TEG in series connection for hot plate	1.97 Amps
6	Output Voltage from phone charger to phone	5.0 Volts
7	Power Output from phone charger to phone	7.8 Watts
8	Open circuit voltage for 2 TEG In series	8.9 Volts
9	Cut off Charging voltage of circuit with 2 TEG Series connection	6.19 Volts
10	Charging threshold voltage with 2 TEG series connection with hot plate or charcoal	6.19volts-6.30Volts
11	Charging Delay transient time using hot plate experimental trial	4 minutes Best Experiment optimal time
12	Maximum voltage of Manifold	3.10 Volts. Remark poor result
13	Maximum Voltage for exhaust	2.058 Volts, Remark poor result
14	Maximum power range from 2 TEG Series connection 88.7 º C to 108.7º C	11.2093 Watts-14.241 Watts Remark feasible to charge the phone

3.2 Discussions

3.2.1 Interpretation of First main Experiment trial from Table 3.1 and Fig 3.1

The **Table 3.1** and **Fig 3.1** above shows the result data in which a graph plot of voltage against temperature was plotted. In this First main trial, the Single Thermoelectric generator was incorporated with the Load or power system in which there was a linear relationship in the increase of temperature of the TEG with the increase in voltage output.

The generated equation shows $Y = 0.00749x-2.3304$ (9)

The regression value of 0.9958 showing that the experiment a very negligible error, since the regression value is close to 1. The maximum voltage was 5.02 at 98.7 º C and for standard android charger a voltage requirement is roughly around 5.0 volt. However, due to the nature of the energy source there is need to deploy two TEG systems in series to have better power output for voltage, current and power. It was observed that the green diode light came up at 3.5 volts at a temperature of 78.7 º C showing the cut-off open circuit voltage which is not still enough to charge the phone. In the last experimental interpretation of 3.2.3 we will see the optimal cut-off voltage for phone charging.
The maximum current was pegged at 1.35 Amps. It should be noted from empirical evidence.

3.2.2 Interpretation Temperature and power for TEG Modules in series connection second trial Result for Table 3.2 and fig 3.2

From the **Table 3.2** and **Fig 3.2,** the following observations was perceived.
This was put here to compare it with the best data output of two TEG Series connection. There was observed a linear relationship between the power against temperature given a linear equation of

$$Y = 0.1858x - 5.213 \quad (10)$$

There was obtained a regression value of 0.9842 which shows a negligible error as not experiment can have a regression value of 1.0. The increase in temperature lead to increase a maximum power of 14.241 Watts

5.13 Type k thermocouple and TEG Comparison with work validation
With reference to Table 3.2 the maximum power required to charge a phone using a charger is 7.8 Watts, the table below shows the comparison in the two thermal electric device power systems

3.2.3 Interpretation of Table 3.3

Table 3.3 shows the result of the characterization of the development of the power regulator of the type-k thermocouple and TEG system and all the phone power requirement with also the specification of thermal electric devices after calibration, development and characterization. The charging threshold cut off voltage was pegged at 6.19 Volts below which the phone will not charge and the maximum power output was pegged at 14 watts indicating that the TEG Power system is favorable over the manifold and exhaust. The manifold and exhaust heat source produced a voltage of 3.10 Volts and 2.058 Volts respectively in comparison with TEG power system that produced a voltage range of 6.19 -6.30 Voltage a s charging voltage. It indicates the manifold and exhaust of the modern automobiles cannot be feasible to be used for TEG systems except more TEG power systems are connected in series not less than 8 to give a much significant output. However, this will increase the cost of set up in automobiles not making it that economical for use. Nevertheless, the charcoal heat source looks promising.

4.0. Conclusion

This current study on “the development and characterization of a thermoelectric generator Power System for charging mobile phone has addressed the specific objectives. Dealing with the major aspect of this work, the TEG and hot plate experiment successfully produced a threshold charging voltage for the phone at 6.19 Volts. The open circuit voltage was pegged at 8.9 volts. The main successful experiment using hot plate also produced a maximum power output of 14.241 Watts which is significant enough to power any mobile phone. It was also observed there was a reverse voltage that was generated due to Peltier effect as described in the introduction section of this paper. The manifold and exhaust voltage output gave 3.10Volts and 2.058 Volts respectively. The heat sources fell short of charging the phone. The thermoelectric generator TEG 1-241-1.4-1.2 was preferable over others due to its open circuit voltage level pegged at 8.9 Volts. The reverse voltage can be generated due to a threshold temperature drop indicating the need for a diode, to make the current go in one direction. It has been observed that for different thermocouple fabrication with same homogeneity in the thermal-electric material wire, the peak values will be unique.

This work from the objectives have been able to address the gap concerning the hot plate or charcoal heat source environment in providing phone charging system at optimal temperature of 98.7 ºC which is close to the operating ambient temperature of engine at 103 ºC. The major gap in relation to unforeseen circumstances or during a time of emergency, the charcoal environment simulated using hot plate has proved to be promising and can really cater for the emergency power needs of the rural areas during power outage. There was a major setback or limitation in the final experimental finding of placing the TEG 1-241-1.4-1.2 in the manifold or exhaust environment. This was not encouraging and more work has to be done in improving the TEG system connections for better output. The module systems need to be much more sensitive to changes in temperature in terms of voltage output.

This research has been able to develop and characterize the thermal electric device of the TEG Power system to successfully charge the mobile phone in the hot plate or charcoal environment. This work will be significant in rural or semi-urban areas where there is epileptic power. Finally, more work has to be done to improve the TEG Seebeck effect to produce higher voltage and have high sensitivity to changes to temperature gradient of the hot and cold region.

5.0 Recommendation

For future work, systems can be put in place to use some concentrated lens in the rural areas context to mimic fire wood to adapt to converting the heat energy to electrical energy to charge a phone. The first idea was using wood, but due to its environmental hazardous nature, magnifying lens or a concentrated ultra-violet light from the sun or the magnifying lens or concentrated solar heat device can be used only during sunlight hour and that device can be incorporated with the hot plate to charge and connect through the heat sink if needed to charge the phone.
The maximum power point tracking system has to be used to keep the system at an optimized temperature to generate steady adequate voltage and power. Finally clean coal can be recommended for use instead of black charcoal which should mitigate against climate change challenges concerning green hose gas emissions in order to reduce green CO_2 emissions by carbon capture((ccs) sequestration)) and storage and in turn channel it to growing plants.

Acknowledgements

I want to acknowledge the efforts of my supervisor Dr G.Mathurine, Dr I.A Onyegbadue and Dr R.U Azike who encouraged me in this work with other distinguished lecturers from the department of Electrical/Electronics Engineering, Igbinedion University. I also want to give acknowledgement, to Dr Babatope Olufemi, Dr F Onoroh and Mr M.J Eze for their support

Nomenclature

$\propto$ =is the seebeck coefficient.
C_2 =is a parameter for computing the heat flow
P =Power
q_h =The heat flow
K_g = the Thompson's coefficient.
$R_{th,h}$ = the thermal resistance of the hot side.
$R_{th,c}$ =the Thermal resistance of the cold side.
R_g = the Electrical Resistance of the TEG Cell.
ΔT = the temperature difference between the heat source and the heat sink.
T_h = the temperature of the hot side.
T_0 = the temperature of the heat sink.
T_1 = the temperature of the heat source.
V =Voltage
X =independent variable
Y= Dependent variable
Z = figure of merit

References

Elghool, A., Naeem, M.F., Basrawi, F., Ibrahim, H., Idris, D.M.N.D., Habib, K. and Yusof, M.H., 2018. Analysis on the Performance of a Prototype of Thermoelectric based Power Generation System. In *MATEC Web of Conferences* (Vol. 225, p. 02019). EDP Sciences.

Cheng, F., 2016. Calculation methods for thermoelectric generator performance. *Thermoelectrics for Power Generation-A Look at Trends in the Technology*, pp.481-506.

Marpaung, H., Singarimbun, A., Srigutomo, W. and Lasmi, N.K., 2023. Thermoelectric Application of TEG1-241-1.4-1.2 for Power Generation from Low Temperature Geothermal Fluid. *Advances in Science and Technology*, *126*, pp.67-77.

Nugraha, H., Prajitno, P., Achmadi, A., Tistomo, A.S., Larassati, D. and Imaduddin, A., 2021, February. Design of a scanning thermocouple inhomogeneity. In *Journal of Physics: Conference Series* (Vol. 1764, No. 1, p. 012215). IOP Publishing.

Onoroh, F., Oluwo, A.A. and Agberegha, L.O., 2021. Propane Gas Thermoelectric Generator with Microcontroller Integrated Development Environment Hot Side Temperature Control. *Acta Mechanica Slovaca*, *25*(4).

Ravindra Bhakit N.M, Jariwala Asahel Banobre & Aniket Maske.2018.*Thermoelectric Fundamentals, material election, properties and performance*.PP 216 Google books \

Risha Mal, Rajendra Prasad, Virendra K. Vijay, Amit R. Verma,2015.*The Design, Development and Performance Evaluation of Thermoelectric Generator(TEG) Integrated Forced Draft Biomass Cookstove*, Procedia Computer Science,Volume 52,2015,PP 723-729,ISSN 1877-0509, https://doi.org/10.1016/j.procs.2015.05.085.The 5th international conference on sustainable energy information Technology <Accessed 20th July 2021>

Gou, X., Yang, S., Xiao, H. and Ou, Q., 2013. A dynamic model for thermoelectric generator applied in waste heat recovery. Energy, 52, pp.201-209.