JEAS

JOURNAL OF ENGINEERING AND APPLIED SCIENCES

Journal of Engineering and Applied Sciences, Volume 17, Number 2, December 2020, 228-241

Comparative Study of the Effect of Clay-Based Proton Exchange Membrane and Agar-Agar in a Microbial Fuel Cell

Obasi L. A[1*], Onukwuli O. D[2], John N[3].

[1,2]Department of Chemical Engineering, Nnamdi Azikiwe University Awka.

[3]Department of Chemical Engineering Federal Polytechnic Ekowe, Bayelsa State.

[*]Corresponding Author's E-mail: engrlaobasi@gmail.com

Abstract:

In this study effort was made to develop, operate and compare the performance of a clay-based proton exchange membrane microbial fuel cell (CB-MFC) with that of agar-agar (Agar-MFC) in achieving power generation and reduction in various pollution parameters that characterize wastewater from sanitary system. The maximum power density generation and chemical oxygen demand (COD) removal efficiencies observed in the cells CB-MFC and Agar-MFC, after a 20 day study period were (80.86mW/m^2 and 64.2%) and (20.93mW/m^2 and 59.53%) respectively, with polarization effect from t_{10} to t_{20}. The results showed a remarkable reduction in physicochemical data: conductivity (µs/cm), pH, Turbidity (mg/l), TSS (mg/l), TDS (mg/l) and salinity (%) with the use of Clay over the use of agar with higher voltage output in clay-based MFC. The result of optimizing the response variables (i.e power density and (COD) removal efficiency) simultaneously using response surface methodology (RSM) approach at regression coefficient, R^2 value of 0.9714 for power density and 0.9843, showed cell optimum performance at clay PPT (365^{0}C), pH (8.17) and Concentration (65.21v/v), and optimum performance values of 43.59mW/m^2 and 68.02% (power density and COD) respectively. This advantage was considered to be a result of higher cell performance due to improved proton conductivity in CB-MFC which resulted in higher reduction rate in wastewater indices during cell operation.

Keywords: MFC reactors; wastewater remediation; proton exchange membrane; Bioelectricity.

1. Introduction

The developing human society comes along with waste generation and management challenges. These wastes come in either solid, liquid or gaseous form. The overall effect is that the physical environment is defaced and polluted. The quality of wastewaters discharged into the receiving waters in the environment determines to a very large extent the state and functions of biodiversity. Management of these wastewaters should not be such that involves a costly or complex process or technology and excessively high energy input. Biological wastewater treatment processes are particularly effective and often considered a better option on the basis of cost and environmental friendliness. To this end, it is pertinent and economically reasonable to employ a simple and cost-effective technological process to degrade the contaminants present while generating electricity (an important resource) in a device called microbial fuel cell (Aelterman, 2009).

Microbial fuel cell is a bio-electrochemical device that provides an enabling platform for conversion of chemical energy in biomass directly into electricity (Ann and Logan, 2010). It is an emerging technology which in recent times have been found as a veritable resource for power generation and consequent wastewater treatment (Ghangrekar and Shinde 2008; Min and Logan, 2004). The basic components of MFCs are the anode chamber (reactors) which hold the substrate and cathode chamber which holds an electron acceptor (usually an oxidizing agent). The protons produced are transferred through a salt bridge connecting the chambers into the catholyte. While the cathode chamber is fully aerated, the anode chamber replete with bacteria is air-tight to allow the microorganisms respire anaerobically. Such microorganism known to be electrochemically active and applicable in

MFCs may include: *Geobactersulfurreducens*(Bond and Lovely, 2003), *Shewanellaputrefaciens*(Kim et al, 2002). In some cases where the microrganism has limited electrochemical activity, the electron recovery and transfer to the electrode can usually be assisted by exogenous mediators such as neutral red, thionine or methylene blue (Liu and Logan, 2003; Niessen et al, 2004).

MFC functions on the principle that the biodegradation of organic materials (known in this context as substrate) produces electric charges which are eventually transferred through the electrode to the external circuit as current electricity (Barua and Deka, 2010; Ditzig et al, 2007). The functionality of this device is dependent on a number of factors; which include: the type and nature of the electrodes used, surface area of the anode relative to that of the cathode (Oh and Logan, 2004), the presence or absence of electrochemical mediators, the type of proton exchange membrane and electrode surface area (Oh and Logan, 2006), type of bacteria and count, concentration of substrate used, cell configuration (dual or multiple chamber type, H-type, R-type, circular or even spherical type) (Tan et al, 2008). In this comparative study, effort was made to examine the relative effect of clay-based proton exchange membrane over the commonly used agar-agar as a means of proton transfer as it affects the overall performance of microbial fuel cell.

2.0 Material and methods

2.1 MFC Design, Construction and Operation.

The approach employed in the design and construction of the MFC for this study was purely experimental. The MFC configuration type of choice was the H-type. Table 1 shows the design information of the device which consists of two chambers (reactors) namely; the anode and cathode chambers, each of volume $0.0013m^3$. These chambers were separated by a linking pipe of internal diameter 0.01m and length 0.08 m containing a mixture of starch and clay to function as the proton exchange membrane (PEM). This PEM ideally and selectively allows the exchange of protons (H^+) between the anode and the cathode chambers, and insulate oxygen or the substrate materials conduction. A schematic diagram of MFC with H- configuration is shown in Figure1.

2.2 Inoculation, enrichment and start-up

About 1 litre of sanitary waste water (SWW) samples was collected from household sanitary system. The was left undisturbed for at least 24 hours under anaerobic condition so that the particulates would settle out. About $10cm^3$ of human urine was added to increase its organic content. No exogenous electrochemical mediator was added and so there was direct transfer of electrons from the bacteria pili to the anode (Kim et al, 2002). An aliquot part of the supernatant of the sample was taken to the laboratory for analyses to establish the presence and level of various water pollution parameters (BOD, COD, pH, salinity, suspended and dissolved solids, ammonia, and waste water conductivity, before being charged as feedstock into the anode chamber of the MFC. The anolyte was further enriched with 0.5M glucose solution (5ml) and 5% yeast extract in order to increase the initial microbial catabolic activity. The mixture was buffered with phosphate (K_2HPO_4+KH_2PO_4,) solution and subsequently 0.2M Na_2HPO_2 (5ml) + 0.1M citric acid (5ml) and the operating pH was adjusted between 7.2 and 7.4.

A 5ml soil solution sourced from contaminated by hydrocarbons oil spill site at Imiringi, Bayelsa State rich in *Geobactersulfurreducens*was prepared and used as inoculum to stimulate an accelerated microbial growth. The enrichment of sample of the anolyte was aimed at establishing the effect of increased sustainable growth and energy of microbe metabolic activity while generating proton and electron. This was used as the initial feed stock for the experiment. the resulting mixture was divided into two aliquots and labeled and properly identified. This chamber was kept airtight throughout the experimentation period.

2.3 External Load:

A load of resistance 2Ω was connected across the electrodes in the external circuit as shown in figure 1. This component stabilized the electron flow and put pressure on the microbes to increase the rate of electron transfer reactions (ETR). The current and voltage generated was read and recorded on a regular daily basis for a 20 days study period using the digital multimeter (DT830L).

Table 1: Design Criteria for a H-type dual chamber microbial fuel cell

MFC type	*Dual chamber H-type*
Chamber (Reactor) Volume	$0.0013m^3$
Electrode type	Graphite (Carbon) rod
Surface area of projected electrode	$0.02017\ m^2$
External resistor applied	2Ω
Proton exchange membrane	Clay-based
PEM length	0.08m
PEM Internal diameter	0.01m
Concentration of Catholyte	$0.1K_3Fe(CN)_6$
Anodic Substrate	Sanitary wastewater
Bacteria (Inoculum)	Mixed consortium
Mediator used	Mediatorless

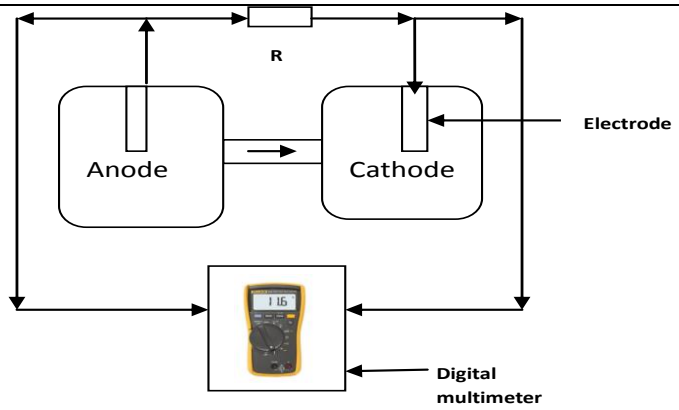

Fig. 1Schematic Diagram of a dual chambermicrobial fuel cell (MFC).

2.4 Catholyte:

The electrolyte supplied to the cathode chamber was one prepared with 0.1M potassium ferry cyanide ($K_3Fe(CN)_6$ solution, an oxidizing agent (Wei et al, 2012), buffered with potassium dihydrogenhotophosphate (0.1M KH_2PO_4) solution to keep the operating pH at 7.5. The cathode chamber was fully aerated where oxygen is used as electron acceptor.

2.5 MFC Electrodes: Graphite rods were used as anode and cathode. Each electrode was fitted firmly through the chamber lid and suspended in the electrolyte medium. While the anode in the anolyte provides the surface for bacteria attachment to enhance successful transfer of the generated electron to the external circuit, the cathode in the catholyte provides the means of electron transfer into the catholyte for reduction reaction with the transferred proton and subsequent oxidation to form water (electron sink).

2.6 MFC Proton Exchange Membrane.

Case1.Clay-PEM**:** The proton exchange membranes used in the study was a locally sourced materials (clay). A clay sample was first subjected to some thermal treatment in a muffle furnace at 200^0C for 1 hour and subsequent chemical treatments via modification of its strength with activated carbon and sodium alginate polymeric substance $(C_6H_7NaO_6)_n$. Clay exhibit adequate thermal and mechanical stability. While the activated carbon enhanced its relative conductivity (Bhaskar et al, 2019), porosity, sodium alginate was added to provide the site for the transfer of hydrogen ions (cation exchange) generated via microbial activity at the anode to the cathode compartment. This treatment, without compromise in the material's chemical properties, was aimed at improving the particulate bonding strength, suitability, stability and performance while in use. The heating caused some physical and chemical transformation of the clay, mass loss due to oxidation of impurities, increased porosity with augmented cation exchange capacity (CEC).

The strength of the clay material was stabilized with sodium alginate.

$$(C_6H_7NaO_6)_n + KAl_2(AlSi_3)O_{10}(OH)_2 \rightarrow NaAl_2(AlSi_3O_{10})(OH)_2 + K^+ \quad (1)$$

Case 2. Agar-PEM**:** Agar-agar dissolved in distilled water at a concentration of 40g/litre. 7.5g of common salt was added to the solution to improve its proton conductivity. The agar-agar mixture was put into an autoclave which was heated to 121℃ for 15mins after which the agar-agar solution, while it was still warm was pour into the 0.08m long sterilized PVC pipe with one end of the PVC pipe closed. The PEM was allowed to cool and solidify.

Anodic Reactions (Oxidation)	Cathodic reactions (Reduction)
$C_6H_{12}O_6 + 6H_2O \xrightarrow{Biocatalyst} 6CO_2 + 24H^+ + 24e^- +$ $E_0 = OCV - IR_{\text{int}}$ $I = generatedcurrent,$ $R_{\text{int}} = cell\,\text{int}\,ernalresis\text{tan}\,ce$	$6O_2 + 24H^+ + 24e^- \rightarrow 12H_2O$ $K_3Fe(CN)_6 \rightarrow 3K^+ + Fe(CN)_6^{3-}\,(Ferrycanideic$ $4Fe(CN)_6^{3-} + 4e^- \rightarrow 4Fe(CN)_6^{4-}\,(Ferrocanideic$

Fig. 2 Anodic and cathodic reactions

3.0 Performance comparison between clay and agar MFCs

Graphical representations of cells comparative performances.

Figure 3 shows the graphical representation of cells performance with respect to chemical oxygen demand removal efficiency over a 20 days study period on the sanitary waste water sample. The comparison indicates a downward trend in Clay-MFC relative to Agar-MFC. This suggests an improved wastewater treatment with the application of clay PEM over the Agar-PEM. Figure 4 shows the comparison of the cells with respect to power generation. T

From the plot, the clay-MFC shows a greater capacity for power generation, with a peak value of 72.19mW/m^2 recorded on the 15th day, over that of agar-MFC (14.28mW/m^2).

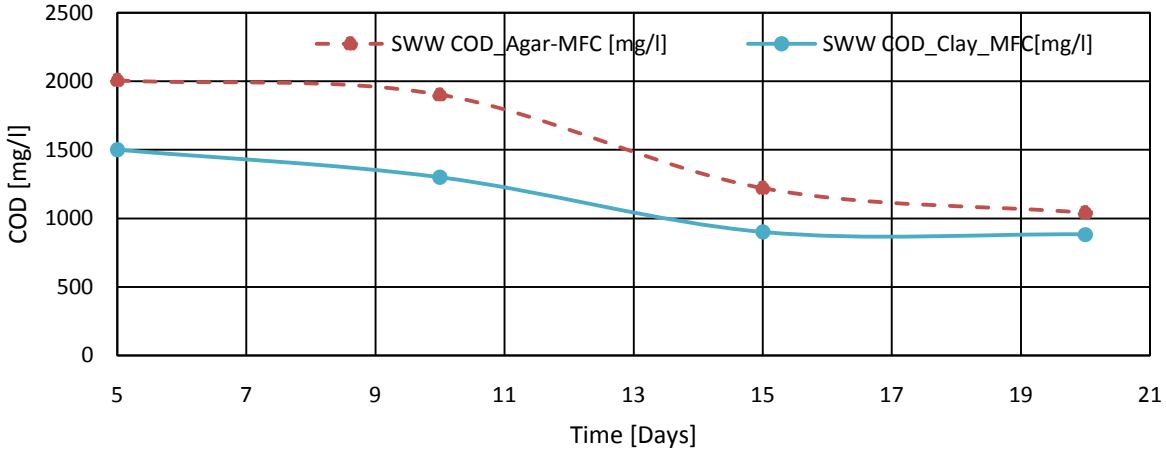

Fig.3 Performance comparison of MFC with clay and agar membranes with respect to COD removal

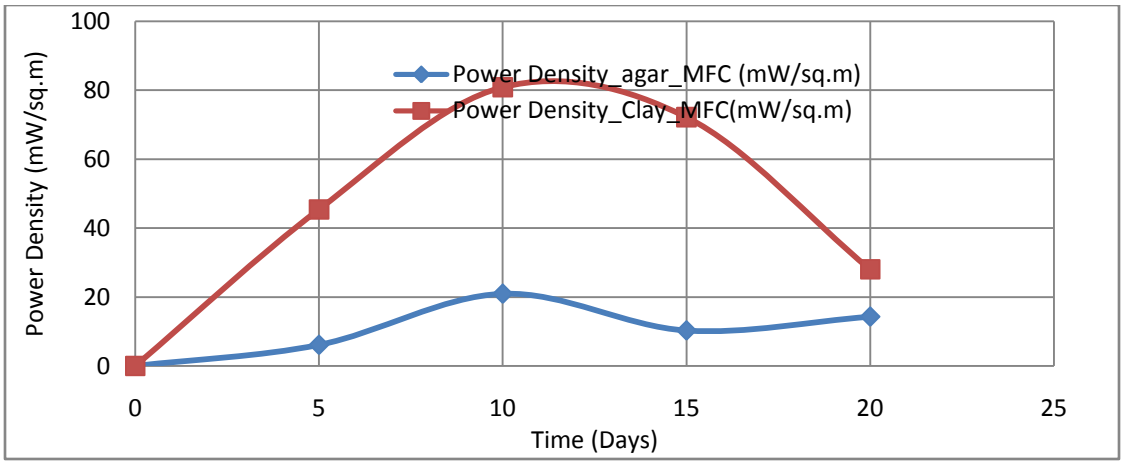

Fig.4 Performance comparison of MFCs with clay and agar membranes with respect to Power generation

Table 2 : Physiochemical Data from Sanitary water Sample

Parameter ↓	In situ	Clay-B Membrane MFC				In situ	Agar-agar_Membrane MFC			
Days →	0	5	10	15	20	0	5	10	15	20
Current (mA)	0.690	1.020	0.960	1.300	0.850	0.21	0.33	0.62	0.45	0.52
Voltage (v)	0.362	0.898	1.699	1.120	0.665	0.321	0.373	0.681	0.461	0.554
Power Density mW/m^2	12.38	45.41	80.86	72.19	28.02	3.34	6.10	20.93	10.28	14.28
Fecal coliform (MPN/100ml)	2400±1.31 $X10^2$	≥2300	≥2300	≥2000	≥1500	≥2400	≥1900	≥1500	≥1000	≥600
COD (ml/l)	2570	1500	1300	920	880	2570	2007	1903	1220	1040
COD removal efficiency (%)	0.00	41.63	49.41	64.20	65.76	0.00	21.91	24.90	52.53	59.53
BOD (ml/l)	416	384	348	234	133	416	388	300	280	220
BOD removal efficiency (%)	0.00	7.70	37.98	43.75	68.02	0.00	6.73	27.88	32.69	47.12
Conductivity(µs/cm)	12.43	10.80	9.62	4.55	2.40	12.43	12.02	11.49	10.00	7.80
DO (mg/l)	3.10	2.89	1.73	1.52	1.00	3.10	2.90	2.46	2.12	1.55
pH	8.0	7.46	6.95	7.37	7.29	8.0	6.3	6.4	5.90	5.8
Turbidity (mg/l)	790	680	458	359	298	790	570	550	330	220
TSS (mg/l)	1,392	1067	967	900	690	1,392	1105	990	890	770
TDS (mg/l)	10,753	6158	4910	3880	2490	10,753	5240	5180	4610	3620
TS(mg/l)	12,145	7225	5577	4780	3180	12,145	6345	6170	5500	4390
Salinity (mg/l)	4,454	3,920	2,460	1,090	160	4,454	4,040	3,883	2,742	2,011

3.1 Governing Models.

The pH of the wastewater depended directly on the number of hydrogen ions present. The hydrogen ion concentration in the waste water is given in the logarithmic function as:

$$pH = -\log[H^+] \tag{2}$$

The surface charge of the wastewater can be shown to depend on the change in pH of the wastewater obtained by the expression according to Bello et al. (2014) as:

$$\sigma = \left[\left(\frac{2}{\pi}\right) n\varepsilon kT\right]^{\frac{1}{2}} \sinh 1.15(pH_0 - pH) \tag{3}$$

Where σ is surface charge (SC), $k = boltzmanconstant$, $T = Temperature$, $\varepsilon = relative dielectric permitivity$, $pH_0 = pH at point zero charge$ and $n = ionic strength.$

Chemical Oxygen Demand, COD removal efficiency of the substrate (ξ) during the cycle of operation was calculated using the equation:

$$\xi = \frac{C_{so} - C_s}{C_{so}} \quad (4)$$

whereC_{so} represents the initial COD and C_s represents the final COD in mg/l.

$$Power\ Density = \frac{Current \times Voltage}{Surface area area of\ projected electrode} \quad (5)$$

4.0 Discussion of Results

4.1 Physicochemical study:

In this process, the biological activity of bacteria in the wastewater, in addition to producing electrons, degraded the pollution parameters such as BOD, COD, turbidity, dissolved solids, suspended solids, pH, and salinity. The values of these parameters were found to vary with change in the operating pH, electrolyte concentration and electrochemical time. In order to optimize the potential of MFC in water and wastewater treatment, electrocoagulation process (EC) was investigated by determining the level of solid particles suspended or dissolved in the electrolyte during MFC operation as seen in Table 2. These particles were able to settle as flocs due to the destabilization, flocculation and sedimentation of the negatively charged particle via interaction with the generated protons from the activity of the microorganisms in the anode chamber.

4.1.1 Conductivity, Salinity, pH and Total Dissolved Solids.

These parameters were measured in-situ using the Multi-Parameter Water Quality Monitor (model 6000 UPG). 50ml sample was collected in glass beakers and the equipment used to take the measurements directly. In reference to Table 2, the improved removal of these particulates physicochemical parameters, BOD, COD, TDS, TSS in the wastewater observed during operation in the cell operated with CB-PEM over the Agar-PEM MFC is shown. This tendency was associated with improved mass transfer of biochemical reaction products from the anodic compartment protons which in the course of movement destabilized and neutralized the negatively charged suspended particles in the waste water medium causing them to aggregate, coagulate and settle as sludge. The initial and final values of the physicochemical parameters, BOD_5 and COD of the wastewaters were determined by standard laboratory equipment and method.

Conductivity and pH treatment

The conductivity of the wastewater measured in micro- or millisiemens per centimeter (µs/cm) is a measure of the concentration of ions which determines its ability to pass flow of electrical charges. The conductivity and pH of the influent wastewater fed into the reactors were 12.43µs/cm and 8.0 respectively. The conductivities of the two reactors reduced to (2.4µs/cm, 7.29) and (7.80µs/cm, 5.8) for CB-MFC and agar-MFC respectively after a 20 day cell operation.

The pH changed from 8.0 to 7.29 in CB-MFC reactor and 8.0 to 5.8 in agar-MFC. This is considered to be as a result of production of more charges at the anode chamber (H^+) of agar-MFC due to higher impedance of proton conductivity as against higher conductivity of clay membrane. This also results in reduced bacteria count with resultant decrease in pH in agar-MFC which negatively affected the voltage output (Kurup et al, 2010). These results suggest significant influence of divalent compounds bulk substrate on MFC performance as suggested by Argun et al., (2007).

Turbidity and TSS removal

Turbidity (measured in *NephelometricTurbidity Unit* (NTU) is a measure of scattering of white light at 90 degrees from the incident light beam by the particulates in an effluent sample. The influent wastewater turbidity reduced for the various reactors from the influent value of 790 NTU to 298 and 220 NTU for CB-MFC and agar-MFC units

respectively. However, the turbidity of thesample tested exceeded the WHO permissible value of 5 NTU for drinking water (Akoto and Adiyiah, 2007). Also the total suspended solid, TSS of the influent wastewater reduced from feed value of 1390 mg/L to 690 and 770mg/L for the CB-MFC and agar-MFC respectively at percentage removal of 50.36% and 44.60% respectively. This TSS reduction is however low as compared to that reported by Min et al., (2005) for pH adjusted MFC reactor.

TDS and Salinity removal.

TDS is a measure of the concentration of dissolved solid particles in a waste water sample. The total dissolved solid in the municipal wastewater sample reduced from the first day until the 20th day of the experiment. From the initial value of 10753 mg/l, the CB-MFC unit had the higher reduction rate in TDS to 2490mg/l and lower in agar-MFC unit to the tune of 3620mg/l. Salinity of the sample was reduced from 4454 to 960mg/l and 2011mg/l CB-MFC and agar-MFC respectively.

5.0 Optimization of the clay-MFC performance.

The functioning of microbial fuel cell has been identified to be essentially dependent on a number of explanatory variables with the overall effect of power generation and wastewater treatment (bio-remediation) considered as the response variables. A functional cell has the capacity to remove the products of the biochemical reactions in the cell anode chamber at low temperature, especially the protons and allow electron recovery. The indices used to measure the effectiveness of a given microbial fuel cell are the power generation and the level of remediation of a given wastewater. The PEM can be classified based on the mechanism of transfer into: *through-plane* and *in-plane* conduction. The study applies the Box-Wilson (1951) statistical approach to investigate and optimize the performance the clay-MFC vis-à-vis the effect of the identified critical variables on the overall output using the response surface methodology, RSM. The response surface fitted with the quadratic models presented below shows the screening or selective response model and the optimization model (second order). The model shows the response *y* as a function of the operating variables, x_i,as shown. Where ε is the statistical error term representing the unaccounted variables in the function and $x_{ij}$is the interaction term (i, j are positive integers). Equation (6) shows the cell response to the three operating variables.

$$y = \beta_0 + \beta_1 x_1 + \beta_2 x_2 + \beta_3 x_3 + \beta_{12} x_1 x_2 + \beta_{13} x_1 x_3 + \beta_{23} x_2 x_3 + \beta_{11} x_1^2 + \beta_{22} x_2^2 + \beta_{33} x_3^2 \qquad (6)$$

Where y, which is a function of the coded variables x_i, is the response, β is the regression coefficient, $x_1, \ldots, x_3$ are coded variables(whosevalues span from center 0 through -1 and +1), β_0 is the intercept term, while β_i is the main effect term and β_{ii} and β_{ij} are the quadratic and interaction effects respectively. Three uncoded factors were considered in this study and were analyzed in a second order polynomial function via central composite rotatable design (CCRD) in design expert version 12. These factors include: PEM preparation temperature (PPT) (^{0}C), anolyte pH, and anolyte concentration (v/v). The concentration of the anolyte was varied by varying the SWW to urine ratio by volume in the mixture after enrichment.The true responses Y_i of the process variables are the power generated expressed as power density and the attendant wastewater index removal in terms of COD removal efficiency depending on controllable input factors. Table 3 shows the RSM design factors and levels.

Table 3: Actual and coded factors and Levels

Un-Coded factor	Coded factor	LEVELS				
		-α	-1	0	+1	+α
PEM PT (^{0}C)	X_1	300	400	500	600	700
pH	X_2	6.5	7.0	7.5	8.0	8.5
Conc. (v/v)	X_3	60	65	70	75	80

The central composite design, CCRD data, as shown in Table 4 were developed from the available statistical data. The analysis of variance, ANOVA was carried out to fit the data to the RSM model. The 3-D and interaction plots were also done to study the interaction of the variable with the response (dependent) variable.

Table 4: Design matrix of experimental data on response from CCD study.

Std Run	Factors			Results			
	Clay PPT (^{0}C)	pH	Conc. (v/v)	Power Density (mW/m^2) Experimental	Power Density (mW/m^2) RSM predicted	COD Removal Efficiency (%) Experimental	COD Removal Efficiency (%) RSM predicted
1	300	6.5	60	46.60	41.90	34.8	37.85
2	700	6.5	60	40.33	40.02	65.4	62.01
3	300	8.5	60	51.40	50.83	65.8	64.37
4	700	8.5	60	65.43	62.95	70.1	72.88
5	300	6.5	80	45.41	45.45	42.4	40.15
6	700	6.5	80	60.90	59.03	63.8	65.76
7	300	8.5	80	49.50	47.37	37.3	40.31
8	700	8.5	80	72.69	74.94	52.8	50.27
9	164	7.5	70	48.67	51.87	38.2	37.04
10	836	7.5	70	73.22	73.47	65.3	65.72
11	500	5.8	70	33.12	36.01	55.2	55.29
12	500	9.2	70	56.33	56.90	65.4	64.56
13	500	7.5	53	37.00	40.61	63.8	62.92
14	500	7.5	86	53.84	53.68	45.7	45.84
15	500	7.5	70	40.33	40.23	72.2	72.22
16	500	7.5	70	40.33	40.23	72.2	72.22
17	500	7.5	70	40.33	40.23	72.2	72.22
18	500	7.5	70	40.33	40.23	72.2	72.22
19	500	7.5	70	40.33	40.23	72.2	72.22
20	500	7.5	70	40.33	40.23	72.2	72.22

5.1 RSMResults and discussion

In this experimental study, effort was made to determine the extent to which the operating parameters in wastewater samples from household sanitary systems – urine mixture as feedstock in a microbial fuel cell were biochemically degraded during MFC operation.

5.2 CCRD study:

Figure 5 shows the 3-D plots indicating the effect of 2-fatcor interaction on the response variable (Power density).

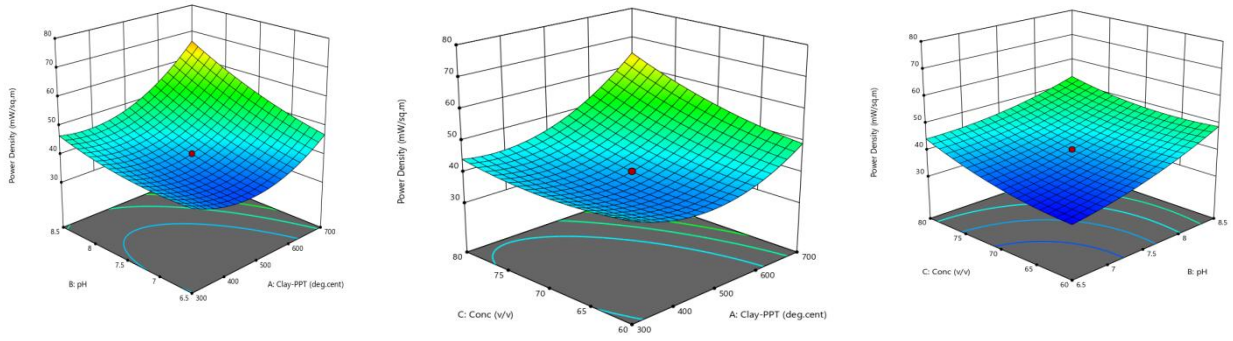

A B C

Fig. 5. Power density (mW/m^2) Response surface plot showing the combined effect of (a) pH and Clay PPT(^{0}C) and (b) Concentration (v/v) and clay PPT (^{0}C) (c) Concentration and pH.

Table 5.ANOVA for quadratic model for power density generation

Analysis of variance using Type III Partial Sum of Squares						
Source	Sum of squares	Degree of Freedom	Mean Square	F Value	P value	
Model	2509.12	9	278.79	37.73	< 0.0001	significant
X_1-Clay-PPT	563.54	1	563.54	76.27	< 0.0001	
X_2-pH	526.73	1	526.73	71.28	< 0.0001	
X_3-Conc	206.16	1	206.16	27.90	0.0004	
X_1X_2	98.00	1	98.00	13.26	0.0045	
X_1X_3	119.51	1	119.51	16.17	0.0024	
X_2X_3	24.57	1	24.57	3.33	0.0982	
X_1^2	907.25	1	907.25	122.78	< 0.0001	
X_2^2	69.73	1	69.73	9.44	0.0118	
X_3^2	86.18	1	86.18	11.66	0.0066	
Residual	73.89	10	7.39			
Lack of Fit	73.89	5	14.78			
Pure Error	0.0000	5	0.0000			
Cor Total	2583.02	19				

Table 6. Fit Summary for power density generation

Source	Sequential P- Value	Adjusted R^2	Predicted R^2
Linear	0.0094	0.4085	0.2035
2FI	0.4220	0.4090	-0.1992
Quadratic	< 0.0001	0.9456	0.7712
Cubic	0.1848	0.9633	-1.5530

Table7. Model summary statistics for power density generation

Source	Std dev.	R^2	Adj.R^2	Pred.R^2	PRESS	
Linear	8.97	0.5019	0.4085	0.2035	2057.48	
2FI	8.96	0.5956	0.4090	-0.1992	3097.56	
Quadratic	2.72	0.9714	0.9456	0.7712	591.06	Suggested
Cubic	2.23	0.9884	0.9633	-1.5530	6594.40	Aliased

$$Power\,Density(mW/m^2) = 40.23 + 6.42x_1 + 6.21x_2 + 3.89x_3 + 3.50x_1x_2 + 3.87x_1x_3 - 1.75x_2x_3 + 7.93x_1^2 + 2.20x_2^2 + 2.45x_3^2 \quad (6)$$

$$COD\,removaleff\,(\%) = 72.2 + 8.52x_1 + 2.76x_2 - 5.07x_3 - 3.91x_1x_2 + 0.36x_1x_3 - 6.59x_2x_3 - 7.37x_1^2 - 4.34x_2^2 - 6.31x_3^2 \quad (7)$$

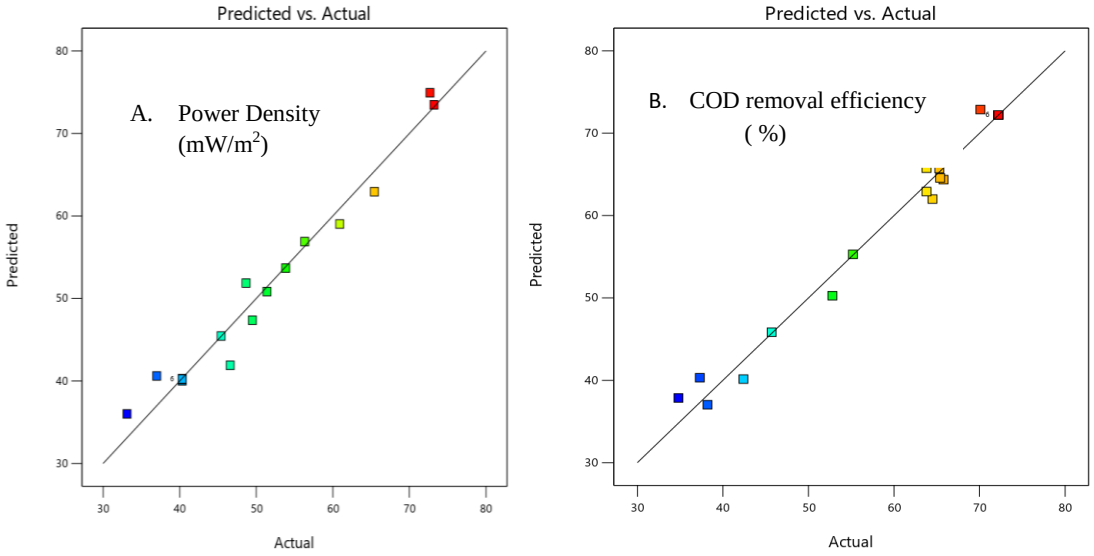

Fig. 6. RSM Predicted versus actual values for (a) Power density and (b) COD removal Efficiency

Table 8. ANOVA for quadratic model for COD removal efficiency

Analysis of variance using Type III partial sum of squares						
Source	Sum of squares	Degree of Freedom	Mean Square	F Value	P value	
Model	3296.95	9	366.33	69.54	< 0.0001	significant
X_1-Clay-PPT	993.41	1	993.41	188.58	< 0.0001	
X_2-pH	103.82	1	103.82	19.71	0.0013	
X_3-Conc	352.06	1	352.06	66.83	< 0.0001	
X_1X_2	122.46	1	122.46	23.25	0.0007	
X_1X_3	1.05	1	1.05	0.1996	0.6646	
X_2X_3	347.16	1	347.16	65.90	< 0.0001	
X_1^2	782.46	1	782.46	148.54	< 0.0001	
X_2^2	272.15	1	272.15	51.66	< 0.0001	
X_3^2	573.41	1	573.41	108.85	< 0.0001	
Residual	52.68	10	5.27			
Lack of Fit	52.68	5	10.54			
Pure Error	0.0000	5	0.0000			
Cor Total	3349.63	19				

Table 9. Fit summary for COD removal efficiency

Source	Sequential P- Value	Adjusted R^2	Predicted R^2	
Linear	0.0252	0.3263	0.1472	
2FI	0.2799	0.2762	-0.1938	
Quadratic	< 0.0001	0.9701	0.8582	suggested
Cubic	<0.0001	0.9987	0.9097	

Table10. Model summary statistics for COD removal efficiency.

Source	Std dev.	R^2	Adj.R^2	Pred.R^2	PRESS	
Linear	10.90	0.4327	0.3263	0.1472	2856.55	
2FI	10.49	0.5732	0.3762	-0.1938	3998.95	
Quadratic	2.30	0.9843	0.9701	0.8582	474.88	Suggested
Cubic	0.4783	0.9996	0.9987	0.9097	302.54	Aliased

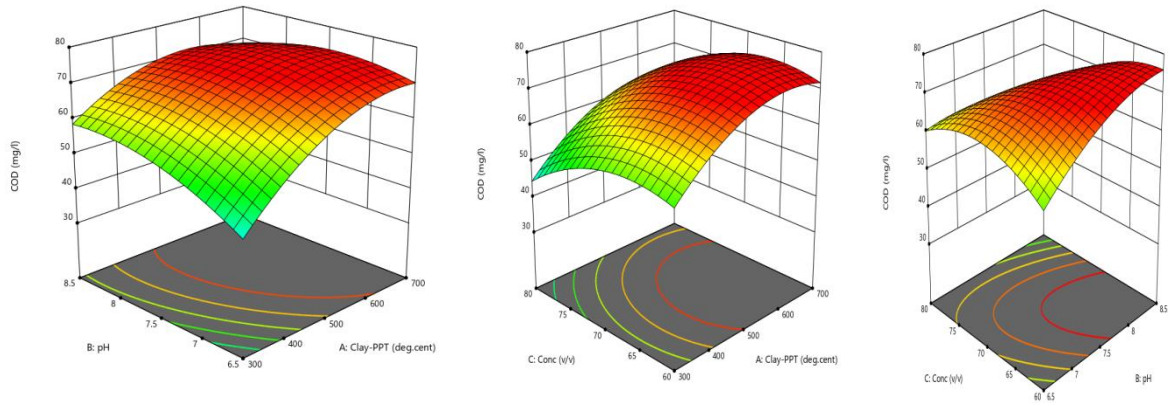

A. B. C.

Fig. 7. COD Removal (mg/l) Response surface plots showing the combined effect of (a) pH and Clay PPT(^{0}C) and (b) Concentration (v/v) and clay PPT (^{0}C) (c) Concentration and pH.

5.3 Discussion and analysis of 3-D plots

The RSM equation (6) which shows the response of the Y on X (y = *f*(x) forms the basis for the response surface and 3-D plots as shown in figures 5 and 7. These show the relationship between the dependent variables (power density generation and COD removal efficiency) and the cell operational factors (independent variables) with the use of clay as a PEM. Figure 5 plots show the combined effect of two factors on the power density generation in MFC. The figure describes the process in line with the RSM design result of Table 4, which shows that the power performance and COD removal depend on the dynamic interplay among the independent variables. The plots indicate that the power generation increases with increase in anolyte concentration, clay PPT and pH (pH>7.0). This clearly suggests that more protons would be transferred across the PEM prepared at higher temperatures. Also the anolyte could have been predominantly neutrophilic as higher pH promoted their activity to generate higher amount of energy. This means that varying one factor (PPT, pH or concentration) would have a corresponding effect of the response variable as seen in the overall cell performance.

According to Figure 5, the power density increases incrementally with increase in the PPT, pH and concentration with the cell optimum performance value of power density of 43.56mW/m^2 was generated at PPT (365.3^{0}C), pH (8.17) and concentration (65.2v/v) optimal conditions when these two factors are considered in isolation. Similarly, Figure 7 shows the response of COD removal efficiency to the variation in clay PPT, pH and anolyte concentration. The plots show COD removal efficiency to increase with increase in the variables considered. This could have been as a result of increased microbial activity in increased pH medium. The microbial count also varies linearly with anolyte concentration. However the decrease over time could have been as a result of decreased activity due to nutrient depletion. The optimum COD removal efficiency recorded during the study period was of 68.02%. The graph therefore shows that the increase in these factors would increase the COD removal efficiency (%) of the cell. This could also have been as a result of the enhanced performance of the clay proton exchange membrane at the instance of increase in these two variables by increasing the rate at which the generated protons at the anode chamber are conduced away into the catholyte. This puts pressure on the anaerobes to catabolize the substrates at an increased reaction rate thereby increasing COD removal.

Equations 6 and 7 indicates the actual factors of the various effects of single (main effect), synergizing (interaction effect), and quadratic effect of the operating controllable factors in the MFC system. The positive sign convention indicates synergistic effect while the negative sign shows antagonistic effect of the factors (You, 2016). ANOVA Tables 5 and 8 for power generation and COD removal respectively indicate that the models were significant having p-values < 0.05. For power density, the coefficient of determination, R^2 of 0.9714 (Table 7) indicates that the independent variables (x_i) of the regression model has been explained by the independent (response) variable (*Y)* to a very large extent, hence the low standard deviation of 2.72. The high regression coefficient in x_i (clay-PPT) indicates that the value of temperature of preparation of the PEM which has effect on the degree of proton conductivity has a predominant effect on the overall performance of the cell with respect to power generation. For COD removal efficiency, the regression coefficient, R^2 of 0.9843 (Table 10) also indicates a significant model with standard

deviation of 2.30. Similarly, the relatively high value of the coefficient of the main effect factor x_i (Clay PPT) also suggests that it is the controlling variable.

6.0 Conclusion

The peak Power density and COD removal efficiency observed in the cells CB-MFC and Agar-MFC, operation with sanitary wastewater, after a 20 days study period were (80.86mW/m^2 and 64.2%) and (20.93mW/m^2 and 59.53%) respectively, with polarization effect set in from the 10th day t_0 to the 20th day. The optimum values of the response variables applying clay as PEM in an MFC were 43.59mW/m^2 and 68.02% at clay PPT (365^0C), pH (8.17) and Concentration (65.21v/v) optimum conditions. This study has substantially provided a basis to assert that clay-based proton exchange membrane MFC has relatively high capacity to remove the anolyte (wastewater) biochemical reaction products compared to agar-PEM MFC, thereby improving the performance of a microbial fuel cell in electrical energy recovery and wastewater remediation.

Reference

Ahn, Y., Logan, B.E. 2009. Domestic wastewater treatment using microbial fuel cells and electrical energy production. *Bioresour. Technol.*101, pp.469–475.

Akoto, O., Adiyiah, J. 2007.Chemical analysis of drinking water from some communities in the BrongAhafo region. *Int. J. Environ. Sci. Tech.*, 4 (2): pp.211-214.

Argun M. E., Dursun, S., Ozdemir, C., Karatas M., (2007). Heavy metal adsorption by modified oak sawdust: *Thermodynamics and kinetics. Journal of Hazardous Materials 141,* pp.77–85

Barron, B., Rosenbaum M., Balcerzak, P., and Angenent L.T., 2010. Microbial Fuel Cell: A Living Battery" *A Curriculum for High School Science Education; the angenent Lab (# 0939882).*

Barua, P., Deka, D., 2010. Electricity generation from Biowaste based Microbial Fuel Cells. *Inter. J. of Energ , Info and Communication*, Vo1 1(1). pp.77-92.

Bhaskar, N., Bhowmick, G.D., Ghangrekar, M.M., 2019. A novel proton exchange membrane developed from clay and activated carbon derived from coconut shell for application in Microbial Fuel cell. *Biochemical Engineering Journal*. Vol. 148, pp. 170-177.

Bello, O., Haman Y., Djouani, K.., 2014. Coagulation process control in water treatment plants using multiple model predictive control. *Alexandria Engineering Journal* .(53), pp.939–948.

Bond, D.R., Lovley, D.R., 2003. Electricity production by *Geobactersulfurreducens*attached to electrodes. *Appl. Environ. Microbiol.69*, pp.1548–1555.

Ditzig, J., Liu H., Logan, B.E., 2007. Production of hydrogen from domestic wastewater using a bioelectrochemically assisted microbial reactor (BEAMR). *International Journal of Hydrogen Energy*, 32 pp.2296-2304.

Feng, Y., Wang, X., Logan, B.E., Lee., H., 2008. Brewery wastewater treatment using air-cathode microbial fuel cells. *ApplMicrobiolBiotechnol*78: pp.873–880.

Ghangrekar, M.M., Shinde, V.B., 2008. Simultaneous sewage treatment and electricity generation in membrane-less microbial fuel cell. *Water Sci.Technol.*58, pp.37–43.

Kim, H. J., Park, H.S, Hyun, M.S., Kim, M., Kim, B. H., 2002. A mediator-less microbial fuel cell using a metal reducing bacterium, Shewanellaputrefaciens. *Enzyme and Microbial Technology* .30, pp.145-152.

Liu, H., Ramnarayanan, R., Logan, B. E., 2004. Production of electricity during wastewater treatment using a single chamber microbial fuel cell, "*Environ. Sc. Tech.,* 38, pp. 2281-2285.

Min, B., Kim, J., Oh, S., Regan, J.M., Logan, B.E., 2005. Electricity generation from swine wastewater using microbial fuel cells. *Water Res.* 39 pp.4961–4968.

Min, B., Logan, B.E., 2004. Continuous electricity generation fromdomestic wastewater and organic substrates in a flat plate microbial fuel cell. *Environ. Sc. Tech.* 38, pp. 5809-5814.

Kurup, R., Persaud. R., Caesar J., Raja, V., 2010. Microbiological and physiochemical analysis of drinking water in Georgetown, Guyana.*Nature and Science.* 8(8), pp. 261-265.

Niessen, J., Scroder U., Scholz, F., 2004.Exploiting complex carbohydrate for microbial electricity generation- a bacterial fuel cell operating on starch. *Electrochem. Comm.* 6, pp. 955-958.

Oh, S., Logan, B.E., 2006. Proton exchange membrane and electrode surface areas as factors that affect power generation in microbial fuel cells. *ApplMicrobiolBiotechnol*. 70: pp.162–169.

Oh, S.; Min, B.; Logan, B. E., 2004. Cathode performance as a factor in electricity generation in microbial fuel cells. *Environ. Sci.Technol. 38*, pp. 4900-4904.

Tan, I. A. W., Ahmad, A. L.,Hameed, B. H., 2008. Preparation of activated carbon from coconut husk: Optimization study on removal of 2,4,6-trichlorophenol using response surface methodology. *Journalof Hazardous Materials 153*, pp.709 –717.

Wei, L., Han, H., Shen, J. 2012. Effects of cathodic electron acceptors and potassium ferricyanide concentrations on the performance of microbial fuel cell. *International Journal of Hydrogen an Energy*, 37(17) : pp. 12980-12986

You, J., 2016. Waste and Wastewater Clean-up using Microbial Fuel Cells. PhD thesis. Faculty of Environment and Technology, University of the West of England, Bristol.