JOURNAL OF ENGINEERING AND APPLIED SCIENCES

JEAS Journal of Engineering and Applied Sciences 10 (2016-2017)

A CENTRAL REMOTE TERMINAL DESIGN FOR FAULT DETECTION BASED ON DATA CORRELATION IN FIXED PROCESS MEASUREMENTS

Ofoegbu ositadinma Edward[1*] and Inyiama .C. Hycainth [2]
[1]Adeleke University Ede, Osun State, Nigeria
[2]Nnamdi Azikwe University, Awka Anambra State, Nigeria
[*]Corresponding Author's E-mail: Edoxnt@yahoo.com

Abstract
This paper introduced the development of a microcontroller based remote terminal unit employed in collecting and transmitting data from multiple data acquisition systems deployed for pollution measurement in an industrial environment. A fault detection model based on standard deviation and data correlation was implemented to determine measured data deviations from a normal range (weighted mean) which indicated a bias fault condition. The model was tested and validated on a pollution database measured from Ife steel plant Ile-Ife, Osun state in 2014. The research showed the benefits of determining measured data confidence with respect to the absence or presence of off-set bias faults.

Keywords: Microcontroller, Correlation, Data, Standard Deviation, Fault Detection

1.1 Introduction

Remote Terminal Unit (RTU) is an electronic device that is controlled by a microprocessor. The device interfaces with physical objects to a Distributed Control System (DCS) or Supervisory Control and Data Acquisition (SCADA) system by transmitting telemetry data to the system (Wikipedia, 2017).The remote terminal unit consists mainly of three major parts (sensors, microprocessor or controller, Communication part), Each R.T.U composed from the sensors that provide the required data for a certain application, the microcontroller which is the most important part of the R.T.U is that which collects the data from the sensors, processes it and gives it to the communication part for delivering it to the central unit .(Wilmshurst,2010) Microcontrollers are devices also known as computer in a chip, its design incorporates all the features found in a microprocessor (central processing unit (CPU), arithmetic and logic unit (ALU), program counter (PC), stack pointer (SP) to be a complete computer : random access memory (ROM), random access memory (RAM), serial and parallel input/output (I/O), counters and a clock circuit(Wikipedia, 2017). The prime use of the microcontroller is to control the operation of the RTU using a fixed program which is stored in ROM . the microcontroller is an embedded system. Thus it's not flexible, it does not have an operating system; it's programmed to perform the required task(Wilmshurst,2010) .The microcontroller inside the R.T.U itself can not send data over any transmission media unless it is interfaced with parts of IC's capable of doing that .

To make the proposed R.T.U send data over computer networks, the controller inside the R.T.U need to have a TCP/IP protocol in its code memory to make it an Ethernet node (Nebojsa,2005). The remote terminal unit can also serve as a sink in a node –sink approach for a deployed sensor network.
The component parts remain very much the same with only some changes due to application. The central remote terminal considered in this study is a central sink where different data acquisition systems (nodes) send their measured data for pre-processing before it is transmitted to a central database for storage and analysis. A fault in a system is a deviation from normal behaviour occurring priori or in real time during the life time cycle of that system. Thus data acquisition systems which are based on an interconnection of diverse discreet components such as sensors etc are susceptible to faults and failures. These faults are diverse and can be as a likely result of age, wear and tear or natural degradation. An offset bias fault is a fault that occurs in a measurement system when there is an added noise to the measured data, this could significantly cause an increase or decrease in the measured data from its original value. This results in error in measurements and is highly undesirable.
Carbon monoxide (CO) and nitrogen oxide (NO) were measured in an industrial environment (Steel Mill) using an MICS 4514 sensor based data acquisition system as shown in figure1. This system employed a supervisory controller which needed feedback information (fault status) from a central remote terminal unit for further analysis.
Thus a fault detection model based on standard deviation and correlation was applied to a microcontroller based CTU to detect weighted data deviation so as to generate the feedback information needed by the DAS.

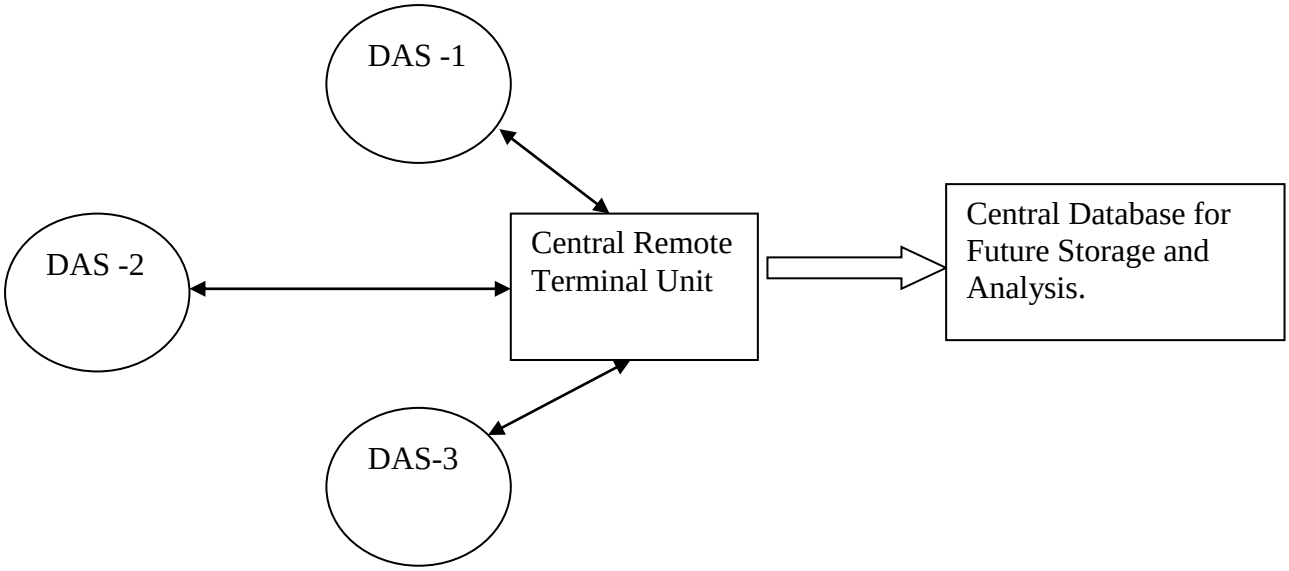

Figure 1: Central Remote Terminal Unit Architecture

figure 1, clearly depicts the role of a central remote terminal unit in a deployed environment, where different Data Acquisition Systems (DAS) used to measure carbon monoxide (CO) and Nitrogen oxide (NO) via an MICS4514 sensor are labelled in this case as DAS-1, DAS-2and DAS-3 . these are all connected to the central remote terminal unit in wireless connection. For the purpose of this study, the connection is made possible by the use of a GSM modem, where each data acquisition system has a GSM modem connected to it which is used to receive and transmit information to the central remote terminal's GSM modem.

2.0 Material and methods

2.1 Hardware Design of the Proposed System

The proposed block diagram of the design process is shown in figure 2, with its implementation circuit diagram shown in figure 3.

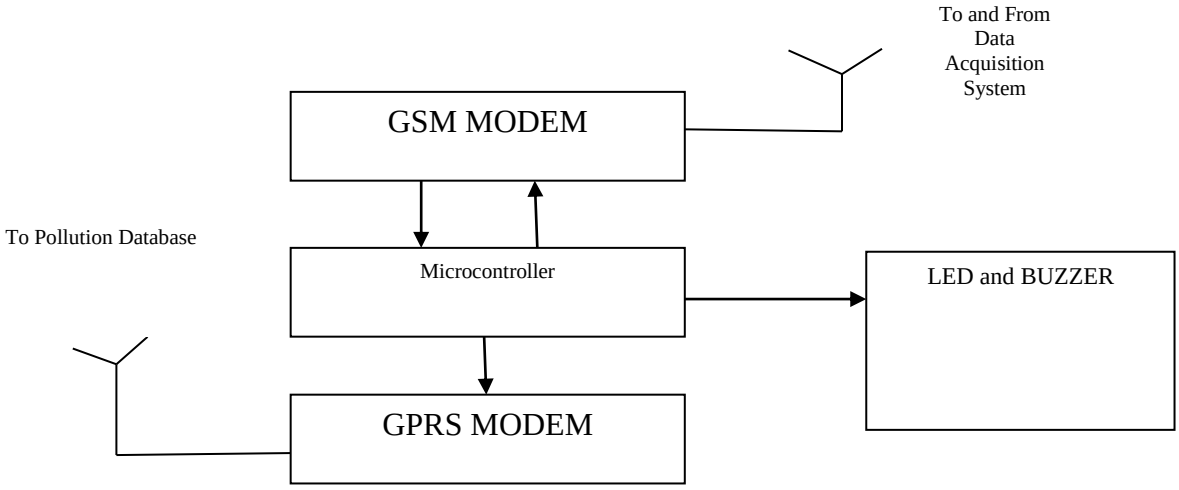

Figure 2: Block Diagram of the Remote Terminal Unit

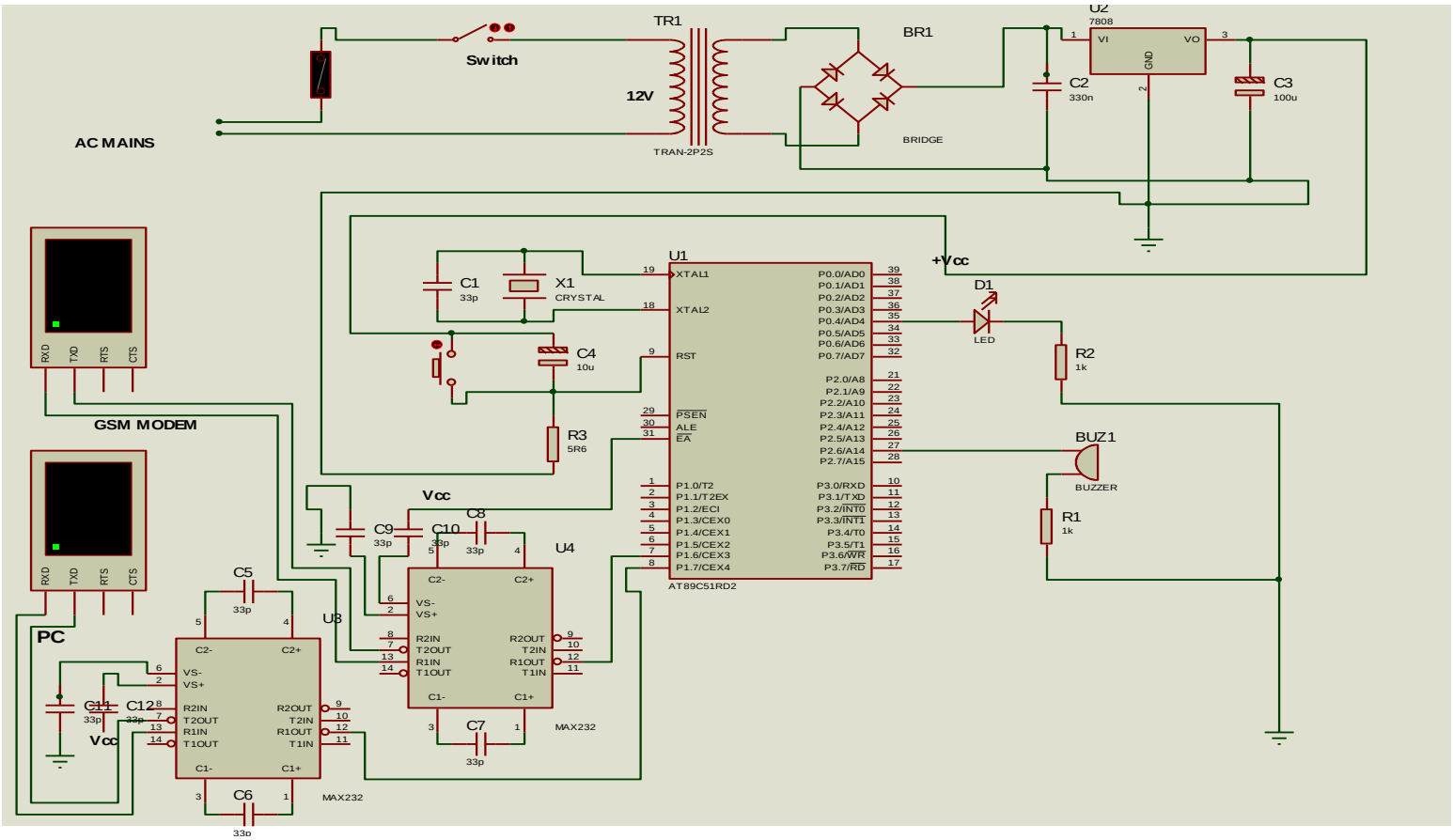

Figure 3: Implemented Central Remote Terminal Unit

The central remote terminal unit was implemented using an ATMEL 89C52 microcontroller, Siemens TC35i GSM modems, LUOCEAN GPRS modem, +5v power supply, generic buzzers and other interconnecting components such as resistors, capacitors, push buttons etc. figure 2 shows that the central remote terminal unit receives information from any DAS connected to it via its GSM modem port while it transmits to the central database via the GPRS modem. All connections to and from the remote terminal unit are wireless. Figure 3 shows the circuit implementation using proteus software package, where the ATMEL 89c52 is interfaced to the generic modems via appropriate pins and also powered by a +5v power supply. LED's have a voltage drop of 1.7V and current of 10mA to glow at maximum intensity. This voltage is thus applied through the microcontroller output pins as shown in figure 3. The negative terminal of the LED is connected to the ground through a resistor. The value of this resistor is calculated using the following formula.

$$R = \frac{V-1.7}{10mA} \qquad (1)$$

Where V is the input voltage

Generally, microcontrollers output a maximum voltage of 5V. This output serves as the input voltage to the LED, thus

$$R = \frac{5-1.7}{10mA} = 0.33k\Omega$$

Thus the value of resistor calculated for use is 330 Ohms. This resistor can be connected either to the cathode or anode of the LED.

According to the 8051 documentation, the voltage across the reset pin should be at logic high for not more than 2 machine cycles (where 1 machine cycle = 4 clock cycles).

$$V_i = 5.0V$$

$V_f = 90\%\ of\ V_i$,

This means $V_i . e^{\frac{-t}{RC}} > V_f$ (2)

So $e^{\frac{-t}{RC}} > 0.9$ (3)

So $e^{\frac{-t}{RC}} < -1.In0.9$

When $t = \frac{10}{f_{xtal}}$ (which is safe, much higher than 2 machine cycles)

$$e^{\frac{\frac{10}{f_{xtal}}}{RC}} < 0.105$$

$$RC > \frac{10}{0.105 * f_{xtal}}$$

$RC > \frac{100}{f_{xtal}}$

If the value of resistor R =10k,

$C > \frac{100}{10k * f_{xtal}}$, then

$C > \frac{0.01}{f_{xtal}}$, the units of C will be in µF, if F_{xtal} is in MHz since the value of the quartz frequency is

F_{xtal} = 11.0592 MHz, thus, $C > \frac{0.01}{11.0592}$ = 1nF, thus any value of C greater than 1nF and R=10k will be able to reset the microcontroller in the CTU.

A step down transformer is used in the power circuit to make the full-wave rectified output voltage of the bridge rectifier small enough. The rectified 220 V can't be fed directly to LM7805, because LM7805 operates in the input ranges of 7 V to 20 V and has a maximum input rating of 35 V.

If it is assumed that step down transformer reduces the amplitude of 50 Hz sine wave from 220 V to 15 V, and its assumed that 5 V power supply will need to output at most I_{max} = 1 A current, the reservoir capacitor to be placed after the bridge rectifier, will have V_{max} = 15 V on it, which is the amplitude of the sine wave.

The capacitor discharges during almost the whole period of half-wave rectified wave (this discharge is caused by the I_{max} = 1 A load current going into LM7805). The discharge time of reservoir capacitor in the case of half-wave rectifier is

$T_{discharge}$ = T = (1/f) = (1/50 Hz) = 20 ms,

The discharge time due to the full wave rectifier will be $T_{discharge}$ = T/2 = (1/2*f) = 10 ms.

Now, at the beginning of each discharge period the capacitor is charged up to V_{max} = 15 V. In order to prevent capacitor voltage going below V_{min} = 7 V (which is the lowest input operating point for LM7805 voltage regulator) in the end of the discharge period, the capacitor value should be chosen with the equation:

$c \geq (\frac{I_{max} * T_{discharge}}{V_{before\ discharge} - V_{after\ discharge}})$ (4)

When, $V_{beforedischarge}$ = V_{max} = 15 V and $V_{afterdischarge}$ = V_{min} = 7 V and I_{max} = 1 A and $T_{discharge}$ = 10 ms, we can calculate that:

$C_{min} = \frac{1A * 10ms}{15-7} = 1.25mF$

A MAX232 IC is used for converting the logic levels, where the RS232 logic levels of the GSM are converted to the TTL logic levels of the microcontroller. MAX232 IC has 16 pins. This is a dual driver IC

as it has two transmitters and receivers. Interfacing of GSM to the microcontroller uses only one transmitter and receiver as shown in figure 3.5 above.

The transmitter pin T1IN of max232 is connected to the transmitter pin of the microcontroller. The receiver pin R1out of the max232 is connected to the receiver pin of the microcontroller. The T1out pin of the IC is connected to the transmitter pin of the GSM modem.

The R1IN pin of the IC is connected to the receiver pin of the GSM modem. Two 33 Pico farad capacitors are connected to the pins of 1, 3 and 4 , 5. Another 33pf capacitor is grounded from pin6 and another 33pf capacitor is connected to the supply of 5v from the through the 2nd pin of the IC. GSM modem used here has sim300 module.

2.2 Software Design of the Proposed System

The following terms are defined for the system
D_{CO} = Measured CO Pollutant Concentration Data
D_{NO} = Measured NO Pollutant Concentration Data
L_{CP} = Lowest Calibration Value for the MICS-4514 Sensor According to Data Sheet
U_{CP} = Highest Calibration Value for the MICS 4514 Sensor According to Data Sheet
(F1) = Fault Extension identifying Condition when (D_{CO}, D_{NO}) < L_{CP}
(F2) = Fault Extension Identifying Condition when (D_{CO}, D_{NO}) > U_{CP}
(F3) = Fault Extension Identifying Condition of Sensor Data un-correlativeness
S_n = Standard Deviation of measured data from mean
S_{n-1} = Standard Deviation of immediate previous measured data from mean.

The pseudo code described below shows exactly how the comparison were made
START
Check GSM Modem for Data Stream
IF Data (D_{CO}, D_{NO}) Received is less than L_{CP}
THEN send Data (D_{CO}, D_{NO}) to Database with an (F1) extension added to affected value in set
ALSO send Data (D_{CO}, D_{NO}) with (F1) extension to supervisory control unit via GSM Modem
IF Data (D_{CO}, D_{NO}) Received is Greater than U_{CP}
THEN send Data (D_{CO}, D_{NO}) to Database with an (F2) extension added to affected value in set

ALSO send Data (D_{CO}, D_{NO}) with (F2) extension to supervisory control unit via GSM Modem
IF L_{CP} < Data (D_{CO}, D_{NO}) < U_{CP}
AND Data (D_{CO}, D_{NO}) satisfies the Error Residual Model Equation 4.5
THEN send Data (D_{CO}, D_{NO}) to Database through GPRS Modem
ELSE send Data (D_{CO}, D_{NO}) to Database through GPRS Modem with (F3) Extension
AND send Data (D_{CO}, D_{NO}) to supervisory controller through GSM Modem with (F3) Extension
END

The MICS 4514 sensor deployed in each data acquisition system is a sensor capable of measuring CO and NO gas concentration in air around any vicinity [Agajo, 2011]. Thus each of the sensors has a lowest calibration point called L_{cp} and the upper calibration point called the U_{cp}. This means that measurements by these sensors in the field should not have values less than the L_{cp} or higher than the U_{cp}. Yet we sometimes observe this scenario happening due to a bias fault factor (Arici & Altunbasak, 2003). The off-set bias fault is an additive sensor fault that occurs when external factors modify the output of the sensor. The presence of dust and other environmental conditions can result in an off -set bias to a sensor reading as well as the presence of component / environmental noise. This condition is primarily responsible for fault conditions (F-1) which represents a drop out sensor fault arising when the measured value is less than the lowest calibration point L_{cp}, (F-2) and (F-3) which represents off-set bias faults arising when the sensor measurement is greater than the highest calibration point U_{cp} or even when the measured values lies within the correct range (L_{cp} < D_{co}/D_{no} <U_{cp}) but is an outlier in comparison with previous measurements. For the MICS 4514 sensor Lcp for CO is 75mg/m^3 and Ucp is 450mg/m^3, while the Lcp for the NO sensor is 40mg/m^3 and 107mg/m^3.

The arithmetic mean equation is thus

$$\mu \frac{\sum_{n=1}^{k} X_n}{k} \qquad (5)$$

Where k is the total number of data values and X_n represents the individual data values themselves ranging from n=1 till n=n.
Thus the standard deviation and variance is thus

$$S = \sqrt{\frac{\sum(x-\bar{x})^2}{n}} \qquad (6)$$

Where S is the standard deviation, $(x - \bar{x})$ is the deviation between a data value and the mean. Where

$\bar{x} = \mu$

The variance is thus $\sigma = s^2$ (7)

This implies that the variance σ, is simply $\frac{\sum(x-\bar{x})^2}{n} = S^2$ (8)

Thus the system calculates the mean continuously throughout its life span while in a specific deployment. A reset of the central remote terminal unit will return this mean value to zero. Therefore the pseudo code below represents the application of these equations

START

INPUT $\sum_{n-1}^{k} X_{n-1}$

ADD $\sum_{n-1}^{k}(X_{n-1} + X_n)$

INCREMENT k= k+1

CALCULATE $\mu_n = \frac{\sum_{n}^{k}(X_{n-1} + X_n)}{k+1}$

STORE $\sum_{n}^{k}(X_{n-1} + X_n) = \sum_{n-1}^{k} X_{n-1}$ for next iteration when X_{n+1}

IF n=k

CALCULATE $\frac{\sum(x-\bar{x})^2}{n}$

WHEN $\bar{x} = \mu_n$

THEN $\sigma = \sigma_n$

THEN $S_n = \sqrt{\sigma_n}$

STORE S_n

STORE $\sum_{n-1}^{k} X_{n-1}$

INCREMENT K to K+1 for next iteration

STOP

The arithmetic mean is additive such that the term $\sum_{n-1}^{k} X_{n-1}$ is always stored and used to add the new X_n gotten in future, with k incremented in value by 1. This ensures that the arithmetic mean used to deduce the variance and standard deviation is based on a large data set which would most likely reflect the overall data pattern.

For every new measurement, after comparison with the L_{CP} and U_{CP} and it is determined that they lie within the range of the MICS 4514 sensor, the σ_n and S_n is deduced. The data is considered to be normal if the following condition holds

$$S_n <= 1.02\ S_{n-1} \quad (9)$$

The use of hourly measurements implies that we can have changes in readings with an addition of maximum measurement error tolerance in sensors of between 2% and 5% (Arici & Altunbasak, 2003). In this study, the lower end of the allowable error tolerance of sensors was chosen and applied it to pollution data to prove the ability of the condition $S_n <= 1.02\ S_{n-1}$ to detect un-correlation.

3.0 Results and Discussions

The table below shows how the conditions are utilized to detect a possible un-correlation from data on the 11/09/2014 and 12/09/2014 at Ife steel plant, Osun State Nigeria measured by a data acquisition system

Table 1: Table Showing Un-Correlated CO Data from Variance Analysis

$V_{out\ (Volts)}$	**R_s (KΩ)**	**PPM**	**(D_{CO}, D_{NO}) mg/m^3 12/09/2014**	**(L_{CP} < = D_{CO} < = U_{CP} , L_{CP} < = D_{NO} < = U_{CP})**	**Output**
(0.569, 0.207)	(2.6, 5.9)	(35.2,89.6)	(44, 120)	(L_{CP} > 44, U_{CP} < 120)	(44[F-1], 120 [F-2])
(0.35, 0.42)	(4.8, 2.5)	(64, 37.34)	(80,50)	(Valid, Valid)	(80, 50)
(0.332, 0.223)	(5.1, 5.4)	(68,82.2)	(85,110)	(Valid, Valid)	(85, 110)
(0.265, 0.42)	(6.6, 2.5)	(88, 37.34)	(110,50)	(Valid, Valid)	(110, 50)
(0.228, 0.394)	(7.8, 2.7)	(104, 41.07)	(130,55)	(Valid, Valid)	(130, 55)
(0.164, 0.499)	(11.2, 1.9)	(149.6, 29.9)	(187, 40)	(Valid, Valid)	(187,40)
(0.212, 0.54)	(8.5, 1.7)	(112.8, 26.13)	(141,35)	(Valid, L_{CP} > 35)	(141, 35[F-1])
(0.187,0.394)	(9.7, 2.7)	(129.6, 41.1)	(162,55)	(Valid, Valid)	(162, 55)
(0.245, 0.384)	(7.2,2.8)	(96, 42.5)	(120,57)	(Valid, Valid)	(120,57)
(0.237, 0.42)	(7.5, 2.5)	(100, 37.34)	(125,50)	(Valid, Valid)	(125,50)

Tables 1, 2 and 3 show clearly how the condition $S_n <= 1.02\ S_{n-1}$ is used to detect uncorrelated data that implies a fault condition. It clearly detected the three fault conditions that are possible in this study namely the F-1, F-2 and F-3. This information is added as attachments to the measured data to enable an end user determine the fault state of the data being measured.

The MICS 4514 sensor is measured by deducing the analog voltage drop a load resistance and also the resistance of its sensitive layer. These values are well represented in the table headers, but they have an equivalent value in PPM and not mg/m^3 as used in this study, thus the equation below was used to generate the mg/m^3 values.

$$concentration\ (mg\backslash m3) = concentration\ (ppm) * \frac{molecular\ mass\ (g\backslash mol)}{molar\ volume} \quad (10).$$

Thus it is observed that when the standard deviation, correlation formula described in equation (5, 6,7and 8) is applied to the measured pollution data and same is compared to determine its conformity with condition described by equation (9), the different fault conditions representing an offset bias error in measurement were observed for the CO measurements as shown in table 2 ,on the 12/09/2014 by 9am when D_{co} = 40(F-1 condition) and by 14:00 when D_{co} = 187 (F-3Condition).The same applied to measurements on NO pollutant where on same day as shown in table 3, at 11am when D_{no} =120 (F-2 Condition) and same also at 13:00 when D_{no}=110.

Table 2: Table Showing Un-Correlated CO Data from Variance Analysis

Date/Time	**V_{out} (Volts)**	**R_s (KΩ)**	**PPM**	**D_{CO}**	**Variance (σ_{CO})**	***Standard Deviation*** (S_{co})	***Immediate past Standard Deviation*** **$1.02\ S_{CO(n-1)}$**	**Fault Due to condition** $S_{CO} \leq 1.02\ S_{CO(n-1)}$
11/09/2014(7am)	0.2718	6.4	85.6	107	834.4014	28.88601		
11/09/2014 (8am)	0.2886	6	80	100	827.1583	28.76036	29.3355	Valid
12/09/2014 (9am)	0.6111	2.4	32	40	872.942	29.54559	29.3356	**(F-1)** $S_{CO} < 1.02\ S_{CO(n-1)}$
12/09/2014 (10am)	0.3502	4.8	64	80	874.1256	29.56562	30.1635	Valid
12/09/2014 (11am)	0.3324	5.1	68	85	872.1439	29.53208	30.1569	Valid

12/09/2014 (12noon)	0.265	6.6	88	110	863.2542	29.38119	30.1227	Valid
12/09/2014 (13:00)	0.2283	7.8	104	130	858.156	29.2943	29.9688	Valid
12/9/2014 (14:00)	0.1635	11.2	149.6	187	906.522	30.1085	29.8801	**(F-3)** $S_{CO} < 1.02\, S_{CO(n-1)}$
12/09/2014 (15:00)	0.2121	8.5	112.8	141	905.8424	30.09722	30.7107	Valid
12/09/2014 (16:00)	0.1867	9.7	129.6	162	921.0434	30.3487	30.6991	Valid
12/09/2014 (17:00)	0.2454	7.2	96	120	912.6165	30.20954	30.9555	Valid
12/09/2014 (18:00)	0.2365	7.5	100	125	905.2705	30.08771	30.8137	Valid

Table 3: Table Showing Un-Correlated NO Data from Variance Analysis

Date/Time	**V_{out} (volts)**	**R_s(KΩ)**	**PPM**	**D_{NO} Mg/m^3**	**Variance (σ_{NO})**	***Standard Deviation*** (S_{NO})	***Immediate past Standard Deviation*** $1.02\, S_{NO(n-1)}$	**Fault Due to condition** $S_{nO} \leq 1.02\, S_{NO(n-1)}$
11/09/2014 (7am)	0.42	2.5	37.3	50	143.8348	11.99312		

11/09/2014 (8am)	0.369	2.9	44.8	60	142.3655	11.9317	12.2329	Valid
12/09/2014 (9am)	0.298	3.8	58.3	78	145.193	12.04961	12.1703	Valid
12/09/2014 (10am)	0.359	3.0	46.3	62	143.8595	11.99415	12.2906	Valid
12/09/2014 (11am)	0.207	5.9	89.6	120	181.7576	13.48175	12.234	**(F-2)** $S_{NO} >$ 1.02 $S_{NO(n-1)}$
12/09/2014 (12noon)	0.42	2.5	37.3	50	180.6345	13.44003	13.7513	Valid
12/09/2014 (13:00)	0.223	5.4	82.2	110	205.4105	14.33215	13.7088	**(F-2)** S_{NO} $> \mathbf{1.02}\ S_{NO(n-1)}$
12/9/2014(14 :00)	0.42	2.5	37.3	50	204.1477	14.28803	14.6187	Valid
12/09/2014(1 5:00)	0.394	2.7	41.1	55	202.2719	14.22223	14.5737	Valid
12/09/2014(1 6:00)	0.499	1.9	29.9	40	203.7253	14.27324	14.5066	Valid
12/09/2014(1 7:00)	0.54	1.7	26.1	35	207.1169	14.25829	14.5587	Valid
12/09/2014(1 8:00)	0.394	2.7	41.1	55	205.2357	14.32605	14.5434	Valid

The data stream shown in fig 6 is the output header frame sent from the central remote terminal unit to a central database for onward storage and analysis. it contains the DAS identification number, time of reception of data, date of data reception, longitude and latitude information to provide telemetry information , then the CO and NO concentration level with/without a fault extension.
Figure 4 and 5 shows in detail a scatter plot graph of data measured for CO and NO on 12/09/2014. It's clear to see the weighted mean of all previously measured values represented by a trend line while data points hover around that line. Clear outlier values which the central remote terminal unit flagged as a faulty can be clearly observed on the graphs in figure 4 and 5.

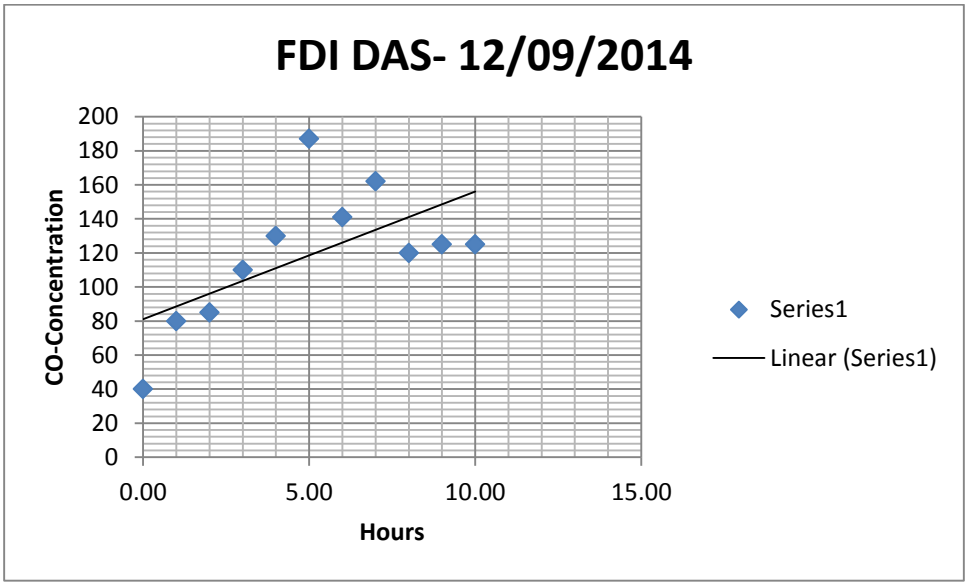

Figure 4: CO Concentration Scatter Plot Showing Weighted Trend Mean Line with Outlier Values

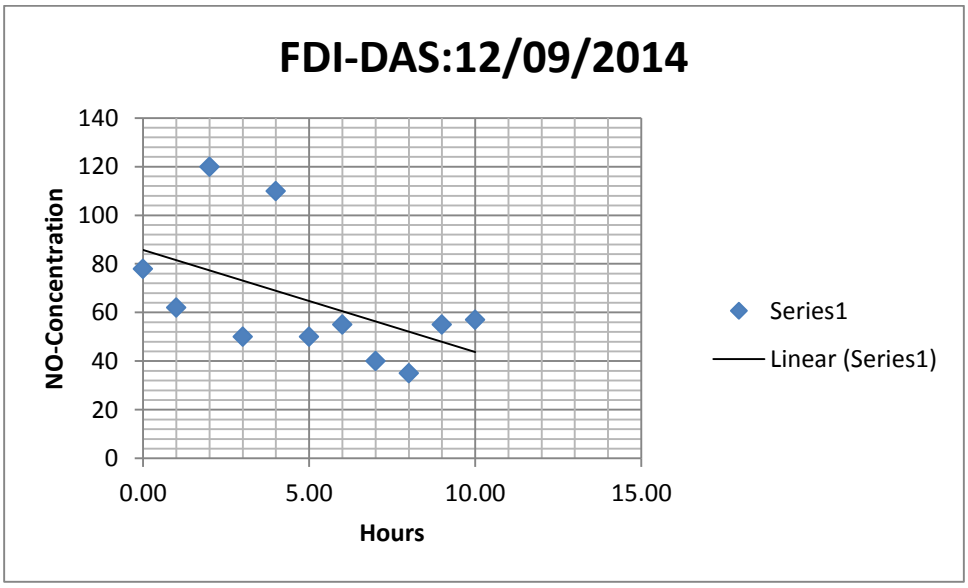

Figure 5: NO Concentration Scatter Plot Showing Weighted Trend Mean Line with Outlier Values

DAS ID (8bits)	TIME (16bits)	DATE (24bits)	Latitude (24bits)	Longitude (24bits)	CO - Level (8bits)	NO- Level (8bits)

Figure 6: Data Stream Output to Database via GPRS Modem

4.0. Conclusion

The central remote terminal unit developed can be deployed for fault tolerant data acquisition systems as a fault detective section to ensure fault correction and accommodation in the data acquisition system. The use of the standard deviation and variance to determine data correlation was possible because the measurement was carried out in a fixed process whose data do not fluctuate so much from a weighted mean average taken over a period of time. The system utilized simple off the shelf components and the result was able to show the efficacy of the model equation condition made in equation (9)in detecting un-correlativeness in measured data, which in turn depicted an off -set bias error in the reading.

5.0 Recommendation

An intelligent approach is recommended using purely analytical redundancy methods. this will reduce the cost of the data acquisition system by a lot and improve its robustness to real time and passive fault conditions.

References

Agajo, J., Inyiama, H., Theophilus, A. (2011). "Remote Monitoring and Estimation of Carbon monoxide Pollution in Indoor Environment using Wireless Sensor Networks via Satelite". *Pacific Journal of Science and Technology*, 12(2): 464-471

Arici, T and Altunbasak, Y. (2003). "Adaptive Sensing for Environment Monitoring ". Centre for Signal and Image Processing, Georgia, pp 1-6.

Dan Eisenreich Brian DeMuth Newnes ,"Designing Embedded Internet Devices", imprint of Elsevier Science Vol 5: issue 6, (USA),July 2003.

Gordon R. Clarke, Deon Reynders, Edwin Wright, *Practical modern SCADA protocols: DNP3, 60870.5 and related systems* 1st Edition,Newnes, 2004 ISBN 0-7506-5799-5 pages 19-21

Iancu., E. "Fault Detection and Isolation Using Spectral Analysis" IFAC Conference, Prague

Nebojsa Matic, "PIC microcontrollers", mikree,2005. ". *International Journal of Engineering Trends and Technology. 4(4): 45-51.*

Tim Wilmshurst, "Designing Embedded System with PIC Microcontrollers principles and applications"Elsevier, 2010.

Wikipedia Admin. Team, "Remote Terminal Unit", http//en.wikipedia.org/wiki/remote terminal_unit February 2017. Accessed on 16th January 2017.