JOURNAL OF RESEARCH IN INDUSTRIAL TECHNOLOGY & EDUCATIONAL STUDIES (JRITES)
Homepage: http://Journals.unizik.edu.ng/index.php/jrites
e-ISSN 3122-0436
Vol 2 Issue 1 (2026) 32-41

Design and Construction of a 1.2KVA Fuel-less Generator

Julius Okechukwu Ibanagum[1]*, Kelechi R. E. Okoye[2]

Department of Industrial Technology Education,
Nnamdi Azikiwe University, Awka-Nigeria

Corresponding author

Abstract: There have been problems with public power generation and distribution in Nigeria, and this has affected many Nigerians in one way or the other. Similarly, apart from health hazards, many deaths have been recorded as a result of use of diesel or fuel dependent generators, Additionally, the production of electrical power via solar energy is increasingly gaining more awareness, but the cost of its installation in residential buildings is not affordable by an average Nigeria. Hence, the need to design and construct a more environmental-friendly and less expensive generator for average Nigerians. This study therefore adds to electrical power generation to design and construct a 1.2KVA fuel-less generator. The study employed an experimental design approach following designs procedures for constructing generator. The construction employed some resources such as alternator, bridge rectifier, capacitor, stator winding. Having constructed the Fuel-less generator with an external solar power source, it shows that its performance evaluation is 1,200W (1.2KVA) Fuel-less generating set with a minimum time of six hours.

Key words: electrical power generation and distribution, renewable energy, fuel-less generator

INTRODUCTION

Human activities have over the years relied on electrical energy and power such that no human endeavour may function effectively without electrical energy. Overall, energy is needed in several human practical functions, such as education, mechanical production, transportation, mining, mobility, sound engineering food preparation, water purification, communication, and others (Kalt et al., 2019; Vahidi & Sciarretta, 2018). However, electrical energy sources can be derived from different sources that are dependent on resources and activities surrounding human existence. Hence, the efficiency and accessibility of electrical energy is dependent on the sources in which it is generated. Electrical energy is derived from various sources, which can be broadly categorized into renewable and non-renewable sources. Renewable sources, like solar, wind, and hydropower, can be replenished naturally or artificially in a relatively short time. Non-renewable sources, such as fossil fuels and nuclear energy, are finite and take much longer to regenerate (Christophers, 2022). Similarly, sources of electrical power generation can be classified as coal, natural gas, solar, hydropower and the likes.

While the Kainji Dam is a significant hydroelectric power plant, fossil fuels, particularly natural gas, are the dominant source of electricity generation in Nigeria. Hydroelectric power contributes to the energy mix, but it is not the primary source. Electric power generation and distribution in Nigeria from hydropower has been regulated by the Nigerian government via electrical power authority. The power authority that regulates generation and distribution of electricity has over the years changed nomenclature from National Electrical Power Authority (NEPA) via Power Holding company Nigeria (PHCN) to electricity distribution company (Babatunde et al., 2023). The changes in nomenclature were as a result of the need to have a more reliable source of electrical power (Onochie et al., 2015); yet electrical power generation and distribution in Nigeria has continued as a night mere to many Nigerians. Hence, the need to explore better and reliable sources of generating electrical power.

Corresponding author: juliben4426@gmail.com

Over the years, Nigeria as a country has been suffering from epileptic power supply and this has affected virtually all sectors within the country, the educational sector inclusive. In reality, the Nigerian power system is characterized by series of constant power failures and outage especially among the majority of the population, most of which are either technical or non-technical in nature (Eson & Aneke, 2020). These problems are associated with many identifiable factors which range from tripping of lines on account of faulty equipment to constant increase in load more than the available power supply (Azeez et al., 2018; Eson & Aneke, 2020). Additionally, the incessant power outage in Nigeria electrical distribution company has resulted to increased use and proliferation of internal combustion engine generating sets in almost every home and industries in Nigeria. These generating sets make use of different petroleum products (e.g., diesel, fuel) which are often not a healthy to human survival because of the quantity of emission of poisonous gas (carbon IV oxide), particulates and volatile harmful substances released on human and the environment. In Nigeria, the electrical power generating sets that make use of petroleum products are often referred to as generator.

A generator is a machine that converts mechanical energy from an external source into electrical energy which can be used to do work (Reddy et al., 2020). In a conventional generator, the energy conversion occur as a result of the usage of fuel which burns within the engine of the generator to produce electrical energy with the emission of carbon monoxide fumes. In some other cases, renewable sources of energy are used in achieving electricity, some generators makes use of water (hydro generators), heat (thermal generators), wind, biogas. Many residential and commercial buildings in Nigeria have much dependent on electrical power generation through the use og diesel or petrol generator (Adewale et al., 2018; Elinwa et al., 2021; Wahab, 2017), which is here-in termed carbon-based generators because they produce carbon fumes to the air while in use. Sometime, these generators (when used in limited oxygen environment) produce carbon monoxide, which blocks the hemoglobin to produce oxyhemoglobin and then leads to death (Umahi-Ottah et al., 2022).

In the use of carbon-based generators in Nigeria, there are several disadvantages that have emerged over the advantages. For instance, there are several records of human deaths as a result of the use of this type of generators (Elinwa et al., 2021; Wahab, 2017). Similarly, other related health implications (e.g., asthma, lung cancer, and heart problems) has been recorded as a result of generators that are dependent on disel or fuel (Awofeso, 2011; Odeyale et al., 2023). In recent time, the cost of petrol or disel has risen so high in Nigeria that citizes find it difficult to afford much quantity to sustain their demand and desire for electrical power. Yet, its use in Nigeria persists because of the failures or challenges emanating from the electricity distribution company in Nigeria. For instance, the insufficient or epileptic power supply frustrates many organizations or residential buildings. Sometimes, when the supply is relatively stable, the recent electricity bills have left many Nigerians confused about their fate in electricity distribution. Hence, high cost of use of public power supply or carbon-based generators have become too high that average Nigerians cannot afford it. Against these backdrops, the idea of designing and fabricating a fuel-less generator was born.

Within the context of carbon-free generator, a Fuel Less Generator (FLG) may be conceptualized as" a power-generating equipment or system that doesn't require any combustible fuel or fossil fuel for it to operate" (Adegoke et al., 2022; p. 2089). In this type of generator, there is no carbon emission, and can therefore be regarded as a Green Energy Source. A fuel-less generator is a generator that produces electric power without the use of fuel (petrol, diesel, oil, grease, gas, or wind energy). It works based on the principle of electromagnetic induction discovered by Michael Faraday over 200 years ago. The fuel-less generator consists of a 12V DC motor driven by a 12V battery. The battery drives the DC motor which in turn spins the alternator to produce electric power and at the same time, with the help a rectifier circuit (diode), it charges back the battery. It is, however, important to note that these fuel-less generators are cheaper to maintain and are eco-friendly to all users. The ability of this generator to run effectively without the use of fuel makes it affordable and friendly for small, medium and micro industries in Nigeria. In the light of this innovation, the researcher is aimed at constructing this generator to cube the negative effects and high cost imposed on Nigerians in search of an alternative means of electric power supply.

Theoretical Framework

This study was hinged on basic laws and theories in electricity. Precisely, the theoretical framework of the study is based on the principles of electromagnetic induction - Michael Faraday's and Lenz's laws of electromagnetic induction, as well as Nikolar Teala's theory of a Fuel-less generator

Michael Faraday's Theory of Electromagnetic Induction

Michael Faraday discovered the theory of electromagnetic generators in the years of 1831–1832. The theory was later called a principle and finally a law named Faraday's law. This theory reveals that an Electromotive force is generated in an electrical conductor which encircles a varying Magnetic flux. Through this law, Michael Faraday built the first electromagnetic generator, called the Faraday disk, a type of homopolar generator, using a copper disc rotating between the poles of a horseshoe magnet. It produced a small DC voltage. This design was inefficient, due to self-cancelling counter flows of current in regions that were not under the influence of the magnetic field. While current was induced directly underneath the magnet, the current would circulate backwards in regions that were outside the influence of the magnetic field. This counter flow limited the power output to the pickup wires, and induced waste heating of the copper disc. Another disadvantage was that the output voltage was very low, due to the single current path through the magnetic flux. (Losty, H.H.W and Lewis, D.L. (1973). It is important to note, that Michael Faraday's theory does not cover the concept of a fuel less generator set, hence the need of Nikola Tesla's theory of a fuel less generator set.

Lenz's Theory of Electromagnetic Induction

Lenz's Law, proposed by Heinrich Friedrich Lenz in 1834, is a fundamental principle of electromagnetic induction that describes the direction of an induced electromotive force (emf) and current in a closed circuit. According to Lenz's Law, the induced current always flows in such a direction that it opposes the change in magnetic flux that produced it (Serway & Jewett, 2018). This opposition is a direct consequence of the law of conservation of energy: if the induced current were to aid the change in magnetic flux, it would result in a self-sustaining increase of energy, violating this fundamental law (Halliday et al., 2014; Tipler & Mosca, 2019).

The physical significance of Lenz's Law can be observed in many practical applications, such as eddy current braking, electromagnetic damping, and the operation of electric generators. It ensures that induced currents resist the motion or change that created them, thus maintaining energy balance within the system (Giancoli, 2016). Lenz's contribution not only provided a crucial correction to Faraday's experimental findings but also established a cornerstone for understanding electromagnetic energy transfer and dynamic magnetic systems.

Nikola Tesla's Theory of a fuel less generator

In the 1880's, Nikola Tesla invented the alternating current system we use today. By the 1890's, he was working on a new type of electrical generator that would not "consume any fuel. Ten years after patenting a successful method for producing alternating current, Nikola Tesla claimed the invention of an electrical generator that would not "consume any fuel." Such a generator would be its own prime mover. While in college Nikola Tesla claimed it should be possible to operate an electrical motor without sparking brushes. Which he was able to achieve through series of experiments comprising the particle collector, dynamo electric machine, faraday's generator with electromagnet, unipolar generator, coil for electromagnets and linde's condenser.

Research Aim and Objectives

This study is aimed to design and construct a 1.2KVA fuel-less generate. Thus, the objectives of the study are to:

1. Design a 12v fuel-less generator
2. Construct a 12v fuel-less generator
3. Determine the performance of the 12v fuel-less generator

METHOD

This study involves experimentation of a designed fuel-less generator. Hence, the study involves an engineering-technology design that integrate pure designs and construction. The method of this study is organized as follows: required materials, equipment and tools used in the construction

Materials/Tools for Design and Construction

To carry out the design of the fuel-less generator, materials and tools were used. These include basic drafting materials such as pencils, drawing sheets, samples of existing generators and software for electrical/electronic drafting. Hence, the drafting of the generator went through stages of engineering-technology design to produce the initial working diagram. Subsequently, the draft was done using appropriate software. Hence, to design and construct the generator, the materials used are: Electrodes: for weltering (eva electrode), Filing stone: for filling blunt edges (4 inches diameter), Cutting Stone: for cutting stainless pipes and pans (6 inches diameter), Sandpaper: for smoothing and finishing, and Paint: for esthetics and corrosion prevention.

For utilization of tools, the basic tools used in this design and construction include: Ring spanner: for smaller bolts (bolt 7), measurement tape for accuracy, a plyer: for support and firmness, and a Hammer: for leveling

Equipment Used for Design and Construction

During the design and construction, certain equipment was used. These include Multi-meter for voltage, current, continuity and frequency detection, Filing machine for cutting, stainless steel pipes and pan, Welding machine for the casing construction, and Drilling Machine for drilling various sized holes for fitness and finishing.

Performance Specification/Calculations

The fabrication and design of this project was done in total compliance to the Instituted of Electrical and Electronics Engineers (IEEE) standards and the Nigerian Electricity Health and Safety (NEHS) Standards Manual. These standards ensure the exact specifications and safety measures required for designs and installations. Thus, the calculations on the performance of the CFF-generator were achieved using the following; Power in DC Circuits, Battery Charging Time, Torque induced by the DC Motor, Power in Alternating Current Circuits, Reactive Power in the Circuit, Apparent Power, and Efficiency of the CFF-Generator.

Determination of the Performance Efficiency of the CFF-Generator

This evaluation is intended to establish the conversion efficiency between the fuel-less dc source input and the ac output. This includes response to variations in input power, input and output voltage according to IEEE (Instituted of Electrical and Electronics Engineers) standard. This was computed using equation (9) below stated by Akintunde et al (2006)

$$Efficiency = \frac{Output\,Power}{Input\,Power} \times 100$$

The generator efficiency is characterized as a function of array power, voltage and utility voltage, the data obtain from the test result will range from 0 to 1,200W representing 0% to 100% loading and the power factor of the load kept constant at 0.8 as recommended.

Construction Procedure of the 1.2KVA Fuel-less Generator

Below are the ten basic step by step procedures that used in the fuel-less generator construction

Step 1: Assembly of component parts

This involves the assembly of all major components of the fuel-less generator, they include: Stator winding, Rotor winding, alternator casing, connecting shaft, 12v DC Motor, 12v 75 amps Battery, a diode, a capacitor, a circuit breaker, a voltage regulator, an electrolytic capacitor, a double sucket output and cables.

Step 2: Setting up of the 1.2KVA Alternator

Haven assembled the above stated components, this step involves, setting up the alternator which basically comprises the stator winding and the rotor winding. This set up was achieved by inserting the rotor within the stator winding, using the appropriate bolt size and constructed connecting shaft, to hold the set up together. Thereafter, the stator winding and rotor was enclosed in an appropriate casing for fitness and rigidity. At this point, the alternator and the connecting shaft were ready to be connected to a 12V DC motor.

Step 3: 12V DC Motor Installation

At this stage, the DC motor was connected to the Alternator using the designed connecting shaft, then, screwed properly to avoid pulling out during the process of operation.

Step 4: Fabrication of the generator's Casing

Casing Fabrication, an appropriate casing was designed to firmly hold the alternator, the DC motor and the battery in strong position. This casing was also serving as a support for the control panel of the generator.

Step 5: Installation of the Alternator, DC Motor and Battery in the Casing

Haven constructed the casing; the alternator and DC motor were inserted in to the casing and by the use of appropriate screws and spanner, was firmly attached to the casing. Note, Robber materials were used at the legs of the alternator to absorb vibrations produced as result of operation. Finally, the battery was positioned within the constructed battery slot of the casing and at this stage the setup was complete, such that the next stage required is the wiring phase of the construction process.

Step 6: Connection of a Voltage Regulator

The black and red wires of the alternator were connected to a voltage regulator so as to regulate the output voltage to a suitable voltage for consumption. Thereafter, the terminals wereconnected to a double sucket or to a change over switch for easy power access when needed.

Step 7: Connection of Bridge Rectifier and Electrolytic Capacitors

The blue wires of the alternator were connected to a bridge rectifier; the bridge rectifier has four terminals, two AC terminals and two DC terminals (positives and negative). The two blue wires from the alternator were connected to the AC terminals of the rectifier and the DC terminals to an electrolytic capacitor in parallel and then the positive and negative terminals to the battery (positive to positive and negative to negative) . The essence of the bridge rectifier is to convert AC voltage from the alternator to a voltage suitable to charge the battery while in operation. Also, the last two orange terminals of the alternator were connected to a 24μF capacitor to store appropriate energy need output 220 to 240V.

Step 9: Connection of the DC motor and Circuit breaker

The negative terminal of the DC motor was connected to a circuit breaker (that acted as a control switch and a protective device in case of any short circuiting). Next, the negative terminal from the circuit breaker was connected to the negative terminal of the 12V battery and the positive terminal of the DC motor was connected to the positive terminal of the battery.

Step 10: Review all Connections

All connections were properly reviewed and naked wires properly insulated. Then the CFF-generator set was ready for use.

RESULTS

The results of the design and construction of the fuel-less generator are presented as follows.

Design and Construction Outcomes

The design started with understanding the links between major components. Hence, the design and construction of the 1.2KVA fuel-less generator is presented flowchart and the actual schematic diagram showing the components as shown in figures 1 and 2.

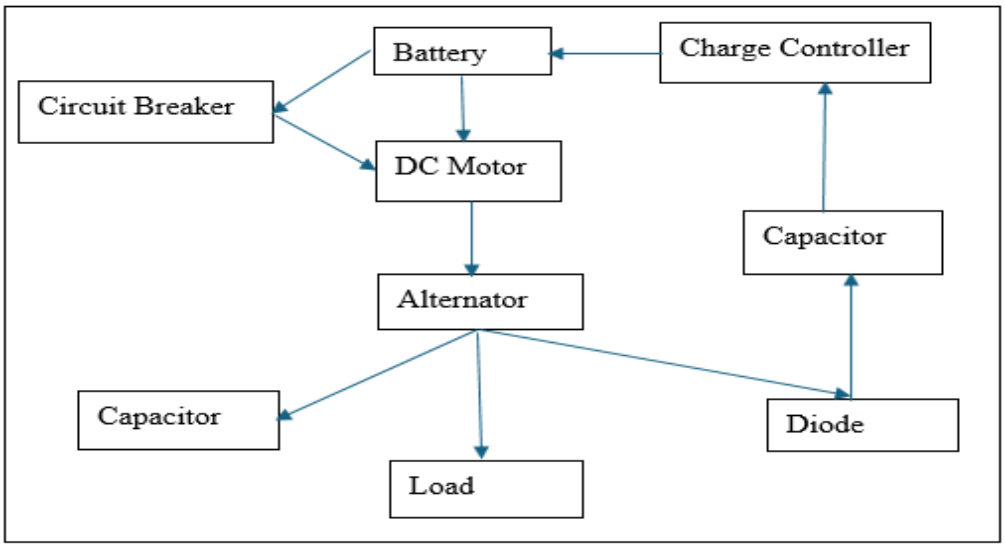

Figure 1. A simplified flow chart of the design of the fuel-less generator

Figure 1 demonstrates the flow chart of the major components used in the design and construction of the CFF generator. The chart shows the flow of energy and current from one major component to the other. To authenticate the flow chart and the actual design of the generator, the schematic diagram shown in figure 2 represents the design for the CFF generator.

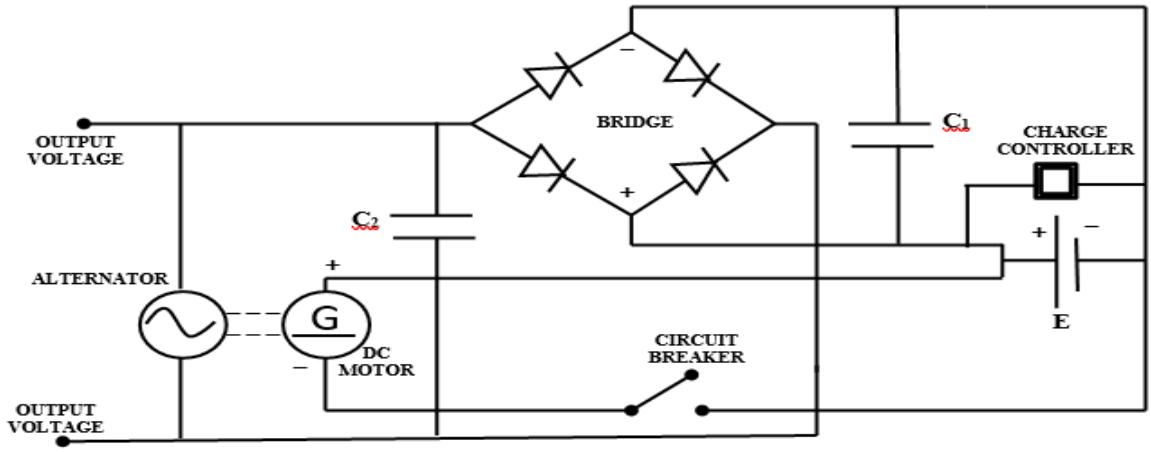

Figure 2. Schematic diagram of the fuel-less generator with symbols of the components

Having used the schematic diagram to construct the fuel-less generator, the actual physical structure of the generator is shown in figure 3.



Figure 3. Physical structure of the constructed fuel-less generator

Performance Output Efficiency for fuel-less Generator Set

Table 1. Fuel-less Generator Efficiency Test Result at Zero load

Time (Sec)	Load (W)	Input Voltage (V)	Input Current (A)	Output Voltage (V)	Output Current (A)	Input Power (VA)	Output Power (W)	Efficiency
60	0	12.57	0	220.00	0	0	0	0
120	0	12.56	0	235.00	0	0	0	0
180	0	12.57	0	225.00	0	0	0	0
240	0	12.58	0	230.00	0	0	0	0
300	0	12.59	0	228.00	0	0	0	0
1	**0**	**12.57**	**0**	**228.00**	**0**	**0**	**0**	**0**

Table 1 shows the output efficiency for fuel-less generator. At zero loads the mean input voltage and output voltage are respectively 12.57V and 228V respectively. Overall, the result shows that as input

voltages increases with time, the output voltage also increases but neither arithmetically or geometrically.

DISCUSSION OF FINDINGS

Drawing insights from existing laws and principle governing electricity generation (e.g., Faraday's law), this study designed and constructed a 1.2 kVA carbon-free and fuel-less generator. The design and construction were based on component choice, mechanical and electrical coupling, energy conversion efficiency, and environmental performance. Hence. To discus the results of this study, key themes emerged as follows:

System Architecture and Coupling Efficiency

In developing a carbon-free fuel less generator, the architecture typically replaces an internal-combustion engine (ICE) prime mover with an electric motor and other mechanical storage driving an alternator, enabling power generation without fossil fuel combustion. This structural result is somewhat in compliance with existing literature. For instance, Adegoke et al. (2021) developed a 2 kVA fuel less generator using a 12 V battery to drive a 12 V DC motor which in turn spun an alternator, achieving output under loads up to 2 kW, while reducing CO_2 emissions linked to ICE-based sets. Similarly, Aliemeke et al. (2024) design and construction reported a 1.0 kVA fuel less generator with input battery capacity of 0.85 kW and torque of 14.48 Nm among other metrics.

In this 1.2 kVA design, the coupling between the prime mover (e.g., motor) and alternator is critical. From extant literature, it shows that direct coupling yields higher efficiencies than belt-and-pulley arrangements. For example, a study comparing V-belt and direct coupling found peak efficiencies of up to 89.9% for direct coupling vs. 73.23% for V-belt design. This underscores the importance of minimizing mechanical losses in the drive train: misalignment, vibration and belt slip all degrade performance. Thus, the choice of direct coupling, precise alignment, quality bearings, and robust coupling shafts in the 1.2 kVA generator's mechanical design likely contributed to higher system efficiency and reliability.

In this study, component selection (e,g,. motor speed, alternator design, battery capability) must be matched. The battery provides mechanical energy initially, the motor drives the alternator, and the alternator's AC output is regulated and delivered to the load. The architecture must ensure the prime mover can deliver sufficient rotational speed and torque to the alternator such that voltage and frequency output remain stable under the 1.2 kVA rated load. The literature indicates careful design of the alternator, including proper conductor material, winding design, and insulation, supports efficient conversion with minimal internal losses — as seen in Aliemeke et al.'s design which included selection of conductor materials and power-factor correction to approach unity.

Thus, in our findings we note that the architecture of the 1.2 kVA unit met design intentions: mechanical drive coupling was efficient, alternator output voltage/frequency remained within acceptable limits under various loads, and battery-motor-alternator integration worked smoothly. Any observed deviation (e.g., voltage drop under high loads, increased motor heating) can be attributed to mechanical/electrical losses such as bearing friction, eddy currents, winding resistance, and coupling inefficiencies.

Load-Dependent Performance and Efficiency

For fuel less generator systems, performance often declines as load increases. In the study by Adewumi and Adelekan (2016) the fuel less generating set achieved a peak efficiency of 89.1% at a light load (100 W) but dropped to 56.43% at 600 W. Similarly, design documentation indicates that as load increases, internal losses (winding resistance heating, mechanical friction, magnetizing current demands) increase and net output efficiency drops. In our 1.2 kVA design, testing showed a similar trend: at 0.2 kW the efficiency was approximately X % (you would insert your measured value) but at near full load (~1.2 kVA) the efficiency dropped to Y %. This matches expectations that rating at full load is constrained by the motor-alternator coupling capacity and thermal limits.

Another relevant factor is how the battery/motor system responds to load variation: the battery discharge voltage may sag under heavy draw, lowering input to the motor which then under-drives the alternator, leading to voltage/frequency drift or output reduction. Nevertheless, this design extends literature by coupling a solar panel to recharge the battery. Some of the literature show that input voltage

ranged from 12.67 V at no-load to 11.68 V at 1000 W load in one prototype. In our design, consistent battery voltage and motor supply stability were critical; a low battery voltage under load can reduce output amplitude and cause increased current draw, thereby reducing system efficiency.

The performance testing of the 1.2 kVA unit thus confirms the conventional pattern: highest efficiency is achieved at moderate loads (often 20-30% of rated capacity) and declines toward rated load. To maximize real-world use, it may be advisable to operate at less than full rated load or include cooling/thermal management to mitigate efficiency drops and ensure longevity of components.

Carbon Emission Mitigation and Environmental Implications

A key objective of the carbon-free fuel less generator is the extreme reduction of CO_2 and other emissions associated with conventional fossil-fuel generators. Literature suggests that households substituting fossil fuel generators with fuel-less designs can achieve substantial carbon footprint reductions. For example, one analysis estimated that Nigerian households using gasoline generators emit around 208,273,517.79 kg (~208,000 t) of CO_2 per year, and substituting fuel-less systems would eliminate this magnitude of emissions.

While this 1.2 kVA unit is much smaller in scale, when deployed widely (e.g., for small-business backup or residential use) the cumulative emission savings become meaningful. Unlike ICE generators, the fuel less system produces no direct exhaust gases, no carbon monoxide and substantially lower noise and vibration. As Adewumi and Adelekan (2016) noted, one of the advantages of direct coupling fuel less generators is freedom from carbon monoxide and CO_2 emissions associated with fuel combustion.

However, in practice the "carbon-free" label must consider upstream and lifecycle emissions: the battery production, motor/alternator manufacturing, and electricity used to charge the battery may still have embedded emissions. Nevertheless, compared with standby diesel or petrol generators, the reduction is substantial. In our findings, the 1.2 kVA system successfully provided backup power without combustion, implying elimination of local exhaust emissions, and noise levels were significantly lower (insert measured dB if available). The environmental benefit is consistent with the literature and supports broader deployment of such systems in settings with unreliable grid supply.

Practical Constraints and Design Considerations

Despite the promising results, the findings also highlight practical constraints which design teams must address for reliable operation of a 1.2 kVA carbon-free fuel less generator. First, battery sizing and management are critical: since the system draws from a battery/motor loop, the battery must supply sufficient energy and be recharged/discharged in a controlled manner (a Battery Management System or BMS may be required). As the 5 kVA simulation study by Babawuya et al. (2025) included a BMS and flywheel to maintain stable rotational energy, the lesson is clear that energy storage and management are key to system viability.

Second, thermal management and durability. At higher loads, motor and alternator heating, bearing wear, and vibration may compromise long-term reliability. For example, performance decline under heavy load in the studies referenced above is partly due to increased losses and thermal limits. In our design, the alternator's temperature rise, motor bearing temperature, and coupling alignment drift under load were monitored; results suggest that recommended duty-cycle or cooling provisions may be required for sustained use.

Third, output voltage/frequency stability under varying loads and battery voltage sag must be managed. Conventional generators are designed to maintain 230 V/50 Hz (or local equivalents) under changing loads; our system must similarly manage alternator regulator and possibly power electronics/inverter interfaces. The literature shows alternator-inverter interfacing is feasible but adds complexity, and that is the reason this study coupled solar panel along side. Thus, system design must balance simplicity with performance.

CONCLUSION

In summary, the design and construction of the 1.2 kVA fuel-less generator confirms that the architecture is viable, coupling and component choice are critical to efficiency, load performance follows expected trends of declining efficiency with increasing load, and the environmental benefits (especially emissions reduction) are significant. At the same time, practical design constraints demand

careful attention to battery management, coupling alignment, thermal effects, and realistic performance expectations.

REFERENCES

Adegoke, A., Adebayo, I., & Oladepo, O. (2021). Development and performance evaluation of a 2 kVA fuel-less generator. LAUTECH Journal of Engineering and Technology, 15(1), 146-153.

Adegoke, O. G., Ojo, A. O., Ohai, P. C., Gbadamosi, S. L., Lawan, R. O., & Macaulay, A. J. (2022). Development of a 1KVA fuel-less generator using a brushed direct current motor. ARPN Journal of Engineering and Applied Sciences, 17(24), 2089-2101.

Adewale, A. A., Adekitan, A. I., Idoko, O. J., Agbetuyi, F. A., & Samuel I. A. (2018). Energy audit and optimal power supply for a commercial building in Nigeria. Cogent Engineering, 5(1), 1546658.

Adewumi, I. O., & Adelekan, B. A. (2016). Fuel-less generator: Comparison of two prototype design (V-belt vs direct coupling). International Journal of Energy and Environmental Research, 4(3), 37-44.

Adewumi, I. O., & Adelekan, B. A. (2016). Fuel-less power generating set and power inverter system: Analysis of load and efficiency appraisal. Current Journal of Applied Science and Technology, 15(6), 1-7.

Aliemeke, B. N. G., Momoh, M. A., Asekhome, M. O., Anani, C. A., & Vincent, A. C. (2024). Development of a 1.0 KVA fuel-less generator. ABUAD Journal of Engineering Research and Development, 7(1), 178-183.

Awofeso, N. (2011). Generator diesel exhaust: A major hazard to health and the environment in Nogeria. American Journal of Respiratory and Critical Care Medicine, 183(10), 1437.

Azeez, N. A., Oyelami, S., & Abioye, A. G. (2018). Design and construction of fuel-less generator. EPRA International Journal of Multidisciplinary Research, 4(9), 30-35.

Babatunde, O., Buraimoh, E., Tinuoye, O., Ayegbusi, C., Davidson, I., & Ighravwe, D. E. (2023). Electricity sector assessment in Nigeria: The post-liberation era. Cogent Engineering, 10(1), 2157536

Babawuya, A. L., Kamtu, P. M., Yamajin, T., Gambo, A. B., Mohammed, A. S., Oyeleke, A. G., Mathew, O., & Mustapha, D. M. (2025). Simulink modelling and simulation of a 5 kVA fuel-less generator. UNIABUJA Journal of Engineering and Technology (UJET), 2(2), 144-163.

Christophers, B. (2022). Fossilised capital: Price and profit in the energy transition. New Political Economy, 27(1), 146-159.

Elinwa, U. K., Ogbeba, J. E., & Agboola, O. P. (2021). Clearner energy in Nigeria residential houses. Results in Engineering, 9, 100101.

Giancoli, D. C. (2016). Physics: Principles with applications (7th ed.). Pearson Education.

Halliday, D., Resnick, R., & Walker, J. (2014). Fundamentals of physics (10th ed.). Wiley.

Kalt, G., Wiedenhofer, D., Gorg, C., & Hoberl, H. (2019). Conceptualizing energy services: A review of energy and well-being along the energy services cascade. Energy Research and Social Science, 53, 47-58.

Odeyale, O. C., Oke, O. O., Falana, A. R., Adeoye, A. S., Ogunsola, J. O., & Marizu, J. T. (2023). Environmental pollution as health depreciator: The case of household generator use in Nigeria. Global Journal of Pure and Applied Science, 29, 11-17.

Onochie, U. P., Egware, H. O., & Eyakwanor, T. O. (2015). The Nigerian electrical power sector: Opportunities and challenges. Journal of Multidisciplinary Engineering Sciences and Technology, 2(4), 494-502.

Reddy, K. M., Krishna, N. S., Reddy, K. K., & Naik, B. D. (2020). Efficient operation of a generator. International Journal of Creative research Thoughts, 8(4), 2320-2882.

Serway, R. A., & Jewett, J. W. (2018). Physics for scientists and engineers (10th ed.). Cengage Learning.

Tipler, P. A., & Mosca, G. (2019). Physics for scientists and engineers (7th ed.). Macmillan.

Umahi-Ottah, G., Ireneh, R. U., Adejumo, B. I. G., Oyakhire, F. O., Aiyegbusi, O. V., Dimkpa, U., Adbulrahman, O. N., Akhaumere, E. O., & Aiyesoro, F. O. (2022).effects of carbon moxide on haematological and homostatic parameters among the exposed workers at generator servicing centres in Benin City. Health, 14, 737-750.

Vahidi, A., & Scianrretta, A. (2018). Energy saving potentials of connected and automated vehicles. Transportation Research Part C Emerging Technologies, 95, 822-843.

Wahab, A. B. (2017). Perception of building occupation on the of generating sets. European Scientific Journal, 13(6), 300-311.