Journal of Innovative Research in Engineering and Science 1(1), October, 2010.
Maiden Edition
© Global Research Publishing, 2010

Experimental Investigation of the Peel Strength and Peel Stress Distribution of Aluminum – Steel (Galvanized Foil) Laminate *(pp. 122-133)*

Okpighe, Sunday Okerekehe
Department of Project Management Technology,
Federal University of Technology, Owerri, Nigeria
Correspondence E-mail: eloziconsultants@yahoo.com

Abstract: Experimental investigation of the Peel Strength and Peel Stress distribution of Aluminum-Steel (Galvanized foil) Laminate is reported. Due to the need for continued improvement in weight reduction in aircrafts in the Aircraft industry; choice of corrosion-free materials in the Food/Beverages and Medical industries, attention has been focused on choice of appropriate materials that combine strength, light weight and corrosion/rust-free properties. Aluminum and Steel hybrid appears to satisfy the orchestrated properties above. Consequent on the foregoing Aluminum – steel (Galvanized foil) laminate bonds were prepared using Araldite Rapid (an Epoxy Adhesive) as the bonding agent. The specimens were subjected to Peel Test on the Mosanto Tensometer. Outcome of investigation revealed that a mode of failure was by the Steel foil simply peeling off the Aluminum piece along the bond film; much strength was needed to initiate the peel, after which little strength was needed per elongation and that the ends of the laminate carried 63.8% of the total load.

Key words: adhesive bonds, aluminum- steel laminate, peel tests, peel strength.

1 INTRODUCTION

Joints and joints usage are as old as the universe and they therefore have been with us for a very long time. The detailed discussions on joints, their varieties and mode of formations have been treated in Okpighe (2009). According to Baldan (2004), the primary function of a joint is to transfer load from one structural member to another. In most bonded joints the load transfer takes place through interfacial shear. Bonded joints could be subjected to different forms of stresses, namely, torsion, bending, tension and compression among others (Okpighe, 2010). Also Baldan (2004), posited that at present, the use of adhesive bonded joints are largely applied to secondary non-critical structures, whereas the use of adhesive bonding in primary structural applications has been somewhat limited because of the difficulty in defining and predicting joint strength, and designing the joint geometry to optimize strength and reliability. The Peel Strength of a joint is the load required to peel the adherends apart. According to Adhesive.org (2010), Peel Tests determine the resistance of bonded joints to peeling forces. Mecmesin (2010), posited that Peel or Adhesion testing is the measurement of the adhesive or bond strength between two materials. Mecmesin range

of Peel/Adhesion Testers include: a) Computer-controlled Peel/ Adhesion Testers model Multi-Test-I; b) Console-controlled Peel/Adhesion Testers model Multi Test-x; c) Motorized and Manual Peel/Adhesion Testers model Multi Test-d. BSI STANDARDS (1979; 1990; 1991; 1993; 1994), prescribed Peel test Standards for adhesively bonded footwear and metal laminates are as follows:

- BS 5131-1.2 (1991): Method of Test for footwear and footwear material, adhesives, resistance of adhesive joints to peeling.
- BS 5131 1.3 (1991): Method of test for footwear and footwear materials, Adhesives, Preparation of Test Assemblies using Adhesives (other than Hot melt Adhesives for heat resistance (creep) and Peel Tests.
- BS 5131-1.6 (1979): Methods of Tests for footwear and footwear materials, Adhesives, Recommended Environmental Storage conditions for Adhesive joints prior to Heat Resistance or Peel Tests.
- BS 5131-1.7 (1991): Method of Test for footwear and footwear materials, Adhesives, Preparation of Test Assemblies using Hot melt Adhesives for Heat resistance(creep) and Peel Tests.
- BS 5350-C 12 (1994): Adhesives. Part c12: 180^0 Peel. Test for flexile –to-flexible Bonded Assemblies T-Peel Test.
- BS 5350-C13 (1990): Methods of Test for Adhesives. Adhesively bonded joints. Mechanical Tests. Climbing Drum Peel Tests.
- BS 5350-C14 (1979): Methods of Tests for Adhesives. Adhesively bonded joints: Mechanical Tests. 90^0 Peel Test for rigid-to-rigid Assembly.
- BS EN 28510-1(1993) or ISO 851 Part 1(1990): Adhesives: Peel Test for a flexible bonded to rigid Test Specimen. Part1:90^0 Peel.
- BS EN 28510-2 (1993) or ISO 8510 (1990): Adhesives- Peel Test for a flexible – bonded-to rigid Test Specimen assembly Part 2 180^0 Peel.

Holownia (1992) investigated the principle of the holographic NDT method using electronic speckle pattern interferometry (ESPI) with particular application to the determination of loss of strength due to water ingress into Steel-to-Copper adhesive joint. Peel test specimen were subjected to prolonged aging in tap water at 50^0C and periodically tested non-destructively using ESPI. To verify the ESPI results, peel tests were also conducted on the same specimens on an Instron machine. An average of two specimens used at each time interval. The total immersion period was up to 3 months with the resulting loss of strength being about 50%. ESPI results showed that same trend but with consistently lower values than those obtained from the peel tests.

According to Adhesives toolkit (2010), experimental results from a series of mechanical tests performed on Carbon Steel (BS 9070 Pt 1/080 A15) joints bonded with either a one-

part rubber toughened epoxy Adhesive, AV119 (Araldite 2007) from Ciba (now Vantico) or a two-part acrylic adhesive, F241 from Permabond show that when subjected to impact loading, the properties of the adhesively bonded joint become difficult to measure. The wedge peel test gives an indication of impact performance but little mechanical property data. In the same vein Adhesives.org (2010), posited that the possible processing/application errors of Adhesives among others are:

- Potlife/skinning time exceeded.
- Surface too cold
- Adhesive too cold
- Adhesives stored for too long
- Mixing errors.

The fore going research appear to have addressed the comparative impact of the environment on the peel strength of adhesive bonded steel copper laminate joints; prescription of test methods for carbon steel and rubber laminate joints; prescription of modern peel testing equipment; and the identification of possible processing/application errors in the usage of adhesives. But the foregoing work did not consider the usage of such test specimen as Aluminum and galvanized steel which are of immense value where light weight design is required such as the aircraft; or where corrosion- free environment is necessary such as the food and beverage and medical industries. Also peel strength were evaluated for these tests but emphasis was not laid on the peel strength distribution in a laminate joint. This research therefore intends to address these identified shortfalls/gap by the evaluation of peel strength and peel stress distribution in adhesive laminates of Aluminum-to-steel (galvanized foil).

This study investigated the major parameters for Strength of Adhesive Bonded Joints by investigating mode of failure of test specimen (Aluminum- Steel foil Laminate); determining the Peel Strength of specimen and establishing the Peel Strength distribution over the laminate area of specimen.

2 MATERIALS AND METHOD

The test equipment is the Mosanto Tensometer (as shown in Figure1 in Appendix). Another model used by Ihueze (2005) is shown in Figure 4. The test materials include aluminum specimen, steel (Galvanized foil) and araldite Rapid (an Epoxy Adhesive). The steel(Galvanized foil) is bonded on the aluminum specimen using the Araldite Rapid to form an Aluminum- Steel (foil) laminate as shown in Figure2 .

2.1 Preparation of Specimens

Aluminum pieces were first cut to approximate grip width from the parent Aluminum sheet using the hand shear machine. These strips were then cut to the exact lengths required. The exact dimensions of the test piece was marked on one of these strips(using scribers, steel rule, tri-square, etc).The 8mm hole for the machine grip was drilled in with the aid of the rotary drill. There after, this test piece was used to mark similar drill point of 8mm diameter hole. After the completion of the drilling process, 5 test pieces of the same length and dimensions for a particular test were bolted together and reduced to an approximate gauge length using the Sacia Shaping machine. Those test pieces were then smoothened using files and emery cloth. Problems encountered in the process include that of using the hand shearing machine to cut thick Aluminum plates (6mm thickness) due to the small size of the machine and the fact that the machine was not fixed to the ground as at then. Filing such a large number of test pieces to exact size was not quite an easy job. A lot of precautions were taken in preparing the test pieces:

- It was ensured that the test pieces were as straight as possible after the cutting process with the hand shear machine (using the anvil to straighten test pieces).
- It was ensured that there was on eccentricity in the test pieces- this was done by marking the centre line on the test pieces before boring in the grip holes.
- Precision of the gauge length dimensions being an important factor in obtaining the desired aim of the experiments- it was ensured that the exact gauge width was not attained by the shaping machine, and files were used to put finishing touches to the test pieces in order to get high precision of the width dimensions.
- By use of the hand shear, presence of residual stresses in the test pieces cannot be entirely ruled out, neither by use of the shaping machine could repeated stresses (thus strain) be ruled out of the test Pieces. Use of flat files on specimen gives rise to repeated stresses too.

In the process it was ensured that steps which could increase either residual or repeated stresses were reduced, following the steps:

- Cutting through short distances with the hand shear.
- Using medium speed range of the Sacia Shaping machine and ensuring that little cut was taken at a time.
- Using the hand file to do gradual reduction of surfaces of test piece.

The steel (Galvanized foil) was cut to dimension using the hand shear and surfaces were smoothened using files.

2.2 Adhesive Bonding Process

The surfaces to be bonded were properly smoothened using hand files and then given a slight degree of roughness using emery cloth. The surfaces were then cleaned with cloth wetted with soap-water until there was no sign of grease or dirt. The surfaces were then finally cleaned with Acetone and allowed to dry. Equal amounts of fluid were squeezed from the Araldite tubes on to the cover plate and mixture stirred with the spatula continuously for about 20 seconds (as stipulated y the manufacturers). A thin layer of Araldite was then applied to the two surfaces to be joined, the surfaces were then held in place together for about 10 to 15 minutes (by which time the Araldite (Rapid) got strong enough to stick both pieces together). The bonded piece was then left for about 20 minutes to grow strong, after which the excess Araldite was scrapped off with the aid of a knife. Precautions taken included:

- Ensuring that there was no eccentricity in each of the test piece joints.
- That the fluid from both tubes of Araldite were equal (within limits of inspection error), as variation in the proportionality of the mixture can result in weak bonds.
- Since Araldite is dangerous to the eyes, care was taken to keep mixture away from the eyes and skin (washing hands with soap-solution in hot water each time after bonding process.
- Care was taken to ensure that the Acetone in use was kept away from any source of fire since Acetone is highly inflammable.

2.3 Determination of Adhesive Film Thickness in Bond for the Bonded Joints

The thickness of the adherends was measured with a Micrometer Screw Gauge before the bonding process. The joint thickness was measured after the bonding process and the difference in these two values give the adhesive film thickness in the bonded joint.

2.4 Test Materials Preparation and Methods

The gauge length was marked off on the specimen and the cross-sectional dimensions taken. Laminate lengths, laminate widths and araldite (adhesive) film thickness were noted. The spring beam and the scale fitted on the Tensometer were noted. Also the gear ratio (magnification factor) being used for the drum drive was noted. A new chart paper was installed on the chart drum. The chart paper was zeroed at the start of the test. The specimen was the mounted on the machine by advancing the right hand jaws with the quick-acting handle. The worm gear was disengaged for this operation after which it was re- engaged once the specimen has been mounted. Alignment and tautness in the mounting was checked for. While a friend turned the handle to move the jaws (using the slow- acting

handle), I did the recording of the load/elongation on the paper by following the mercury with the point and perforating the paper at regular intervals.

2.5 Precautions Taken on Experiments

- Punctures were made more frequently near the yield point to determine the exact yield point.
- It was ensured that the handle of test equipment was turned at constant speed, as the reverse should affect the load/elongation curve.
- It was ensured that the specimen did not slip in the jaws.

3 RESULTS AND DISCUSSIONS

The results of this study are presented in tables 1 – 4.

Table 1: First Test

LOAD (Kg)	STRESS x $10^6 Nm^{-2}$	ELONGATION x $10^{-4}m$	STRAIN
0	0	0	0
0.625	0.063	66.48	0.086
1.563	0.157	158.75	0.206
3.125	0.314	222.25	0.289
3.438	0.346	254	0.330

Gauge Length = 77mm, Bond thickness = 7.8mm, Failure Load = 3.438Kg, Area = (12.5 x 10^{-3} m) x (7.8 x10^{-3}m) = 97.5 x$10^{-6}m^2$, Failure stress = (Failure load x 9.81Ms^{-2})/ (cross sectional area of specimen) = (3.438Kg x 9.81 ms^{-2})/(97.5 x $10^{-6}m^{-2}$) = 0.346 x 10^6 Nm^{-2}, Strain = Elongation/Gauge length = (254 x10^{-4}m)/(77 x 10^{-3}m) = 0.330, Peel Strength = Failure stress/ Failure strain = (0.346 x 10^6Nm^2)/(0.330) = 1.048 x 10^6 Nm^{-2}.

Table 2: Second Test

LOAD (Kg)	STRESS x $10^6 Nm^{-2}$	ELONGATION x 10^{-4}m	STRAIN
0	0	0	0
0.625	0.073	15.88	0.021
0.938	0.110	29.77	0.039
1.41	0.165	79.38	0.103

Bond thickness = 6.7mm, Cross sectional area of specimen = $(12.5 \times 10^{-3}m)(6.7 \times 10^{-3}m) = 83.75 \times 10^{-6}m^2$

Failure load = 1.41Kg, Failure stress = $0.165 \times 10^6 Nm^{-2}$, Peel strength = failure stress/failure strain = $(0.165 \times 10^6 Nm^{-2})/(0.103) = 1.602 \times 10^6 Nm^{-2}$

Table 3: Third Test

LOAD (Kg)	STRESS x $10^6 Nm^{-2}$	ELONGATION x 10^{-4}m	STRAIN
0	0	0	0
0.625	0.071	15.88	0.021
1.250	0.142	65.48	0.085
2.34	0.266	128.98	0.168
2.813	0.320	192.48	0.250

Bond thickness = 6.9mm, Cross sectional area of specimen = $(12.5 \times 10^{-3}m)(6.9 \times 10^{-3}m) = 86.25 \times 10^{-6}m^2$, Failure load = 2.813Kg.

Failure stress = $0.320 \times 10^6 Nm^{-2.}$, Failure strain = 0.250, Peel strength = (Failure stress)/(Failure strain) = $(0.320 \times 10^6 Nm^{-2})/(0.250) = 1.280 \times 10^6 Nm^{-2}$

Table 4: Fourth Test

LOAD (Kg)	STRESS x10^6Nm^{-2}	ELONGATION x 10^{-4}m	STRAIN
0	0	0	0
0.625	0.069	0.99	0.001
1.563	0.173	1.98	0.003
3.125	0.345	3.97	0.005
3.438	0.380	29.77	0.039
4.375	0.484	188.52	0.245
4.844	0.535	291.70	0.379

Bond thickness = 7.1mm.

Cross sectional area of specimen = (12.5 x 10^{-3}m)(7.1 x 10^{-3}m) = 88.75 x 10^{-6}m^2, Failure load = 4.844Kg

Failure stress = 0.535 x 10^6Nm^{-2}, Failure strain = 0.379, Peel strength = (Failure stress)/(Failure strain) = (0.535 x 10^6Nm^{-2})/(0.379) = 1.412 x 10^6Nm^{-2}

From Tables 1 to 4, Mean Peel Load = (3.438Kg + 1.41Kg + 2.813Kg + 4.844Kg)/4 = 3.124Kg, or Peel Load = 3.124Kg x 9.81m/s^2 = 30.649 Newton. Mean peel stress = [(0.346 +0.165 +0.320 + 0.535) x 10^6Nm^{-2}]/4 = 0.342 x 10^6Nm^{-2}, Mean strain = (0.330 +0.103 + 0.250 + 0.379)/4 = 0.266. Mean peel strength = [(1.048 +1.602 + 1.280 + 1.412) x10^6Nm^{-2}]/4 =1.336 x 10^6 Nm^{-2}.

4 RESULTS AND DISCUSSION

Results from Table 1 gave a failure load of 3.43Kg, Failure stress of 0.346 x 10^6Nm^{-2} and corresponding strain of 0.330 and peel strength of 1.048 x 10^6Nm^{-2}. Also the results from Table 2, with failure load at 1.41Kg gave a corresponding failure stress and strain of 0.165 x 10^6Nm^{-2} and 0.103 respectively and a peel strength of 1.602 x 10^6Nm^{-2}. In the same vein, results from Table 3 with failure load at 2.813Kg, gave corresponding failure stress and strain of 0.320 x 10^6Nm^{-2} and 0.250 respectively and a peel strength of 1.28 x 10^6Nm^{-2}. The

results from Table 4 gave a failure stress of 0.535 x $10^6 Nm^{-2}$ and strain of 0.379 corresponding to the failure load of 4.844Kg. The mode of failure of test piece (specimen) was by the Steel foil peeling off the Aluminum piece along the bond film. From the above results, the mean peel strength for the Aluminum- Steel foil laminate is 1.336 x $10^6 Nm^{-2}$ and mean peel stress of 0.342 x $10^6 Nm^{-2}$. In Fig. 3 (in Appendix) it is observed that a linear relationship with sharp gradient exists between peel stress and peel strain of the laminate specimen up to approximately a peel stress of 0.345 x $10^6 Nm^{-2}$, and thereafter occurs a kick giving a much more gentle positive slope up to total failure of joint. The interpretation of this slope in Figure 3 (in Appendix) is that much peel strength was needed to initiate the peel, after which little strength was needed per peel strain. Results of Fig. 3 revealed that the ends of laminate bonds carried 64.5%of the total load, hence the strength.

5 CONCLUSIONS

Peel Test results from above revealed that the mean Peel stress is and the mean peel strength is1.336 x $10^6 Nm^{-2}$. The peel stress – strain curve displays two regions. The first region exhibits the peel strain – strain behavior of the joint periphery and the second region exhibits the peel stress – strain behavior of the joint area away from the periphery. While slopes of the regions 1 and 2 are positive, that of the first region is steeper than that of the second region. The slope of region 1 indicates that much peel strength is needed to initiate the peel (at very little strain) after which in region 2 little peel strength becomes necessary per peel strain. These values show that the ends of laminate bonds carried 64.5% of the total load.

6 ACKNOWLEDGEMENTS

My appreciation goes to the Department of Mechanical Engineering, University of Benin, Benin-City, Nigeria, for providing the facilities for this experimental investigation. The contributions, comments and suggestions by Dr C.L. Mehrotra (Former Senior Lecturer, Department of Mechanical Engineering, University of Benin, Benin-City, Nigeria) is hereby acknowledged. My thanks also go to Professor R.O. Onyeonwu, Former Head, Department of Mechanical Engineering, University of Benin, Benin-City, Nigeria, for taking the necessary steps to ensure availability of research materials.

7 REFERENCES

Adhesives.org (2010), Joint Testing-
Adhesives.www.adhesives.org/StructuralDesign/JointTesting.aspx

Adhesivestoolkit (2010), Failure Modes and Critical – Adhesives Design Toolkit. www.adhesivestoolkit.com/Docu_Data/--/Project2.xtp

Baldan, A., (2004), Adhesively Bonded Joints in Metallic Alloys, Polymers and Composite Materials: Mechanical and Environmental Durability Performance. *Journal of Materials Science*. 39 (15). Pp. 4729-4797. www.springerlink.com/index/M0147L82PV38763P.pdf

BSI STANDARDS Summary(1979; 1990; 1991; 1993;1994), Adhesive Design Tool Kit. BSI Customer Services. 389 Chiswick High Road, London.W4 4AL. cservice@bsi-global.com; www.adhesivestoolkit.com/---tests/BSI.

Holownia, E.P., (1992), Comparison of Peel Test and Holographic NDT Method for Water Ingress Into Metallic Joints in *International Journal of Adhesion and Adhesives* . 12 (4). Pp. 241- 244. October 1992. Linkinghub.elsevier.com/retrieve/pii/0147492900609. http://www.sciencedirect.com/science?

Ihueze C.C.(2005), Optimum Buckling Response Model of GRP Composites. Ph.D Thesis. Department of Mechanical Engineering, University of Nigeria, Nsukka.

Mecmesin (2010), Test Solutions- Peel/Adhesion Testers. Mecmesin Ltd. Newton House, Spring Copse Business Park, Stinford, West Sussex RH 13 OSZ. UK. info@mecmesin.com.

Okpighe, S.O., (2009), Strength of Adhesive Bonded Joints: Comparative Joint Design/Tests in the *Journal of Physical Science and Safety Studies*. 1 (1).July 2009. Rosefelt Academic Publication. Port Harcourt, Nigeria. rap@gmail.com

Okpighe, S.O., (2010), Strength of Adhesive Bonded Joints: Tension Test on Solid Bars in the *Journal of Chemical and Mechanical Engineering Practice: International Perspective.* 1 (2). August 2010. ICIDR Publishers. Ikot Ekpene, Nigeria. www.icidr.org.

APPENDIX

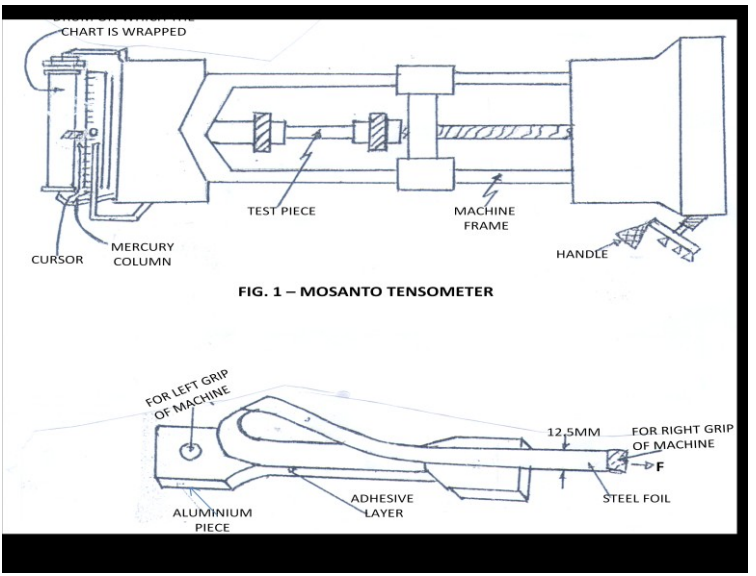

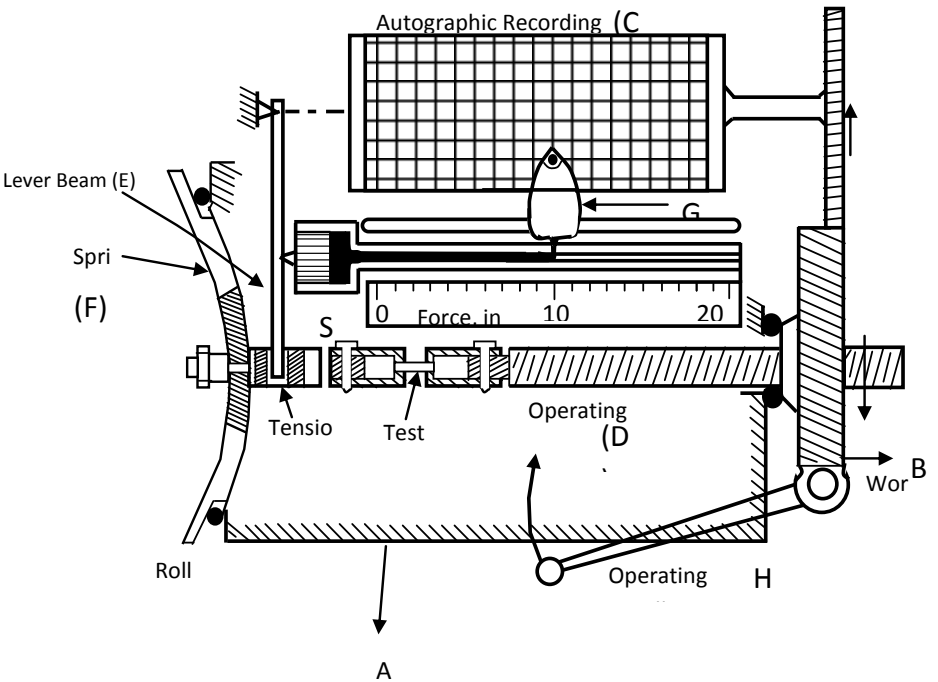

Figure 4: Line Diagram of Hounsfield Monsanto Tensometer (Ihueze, 2005)

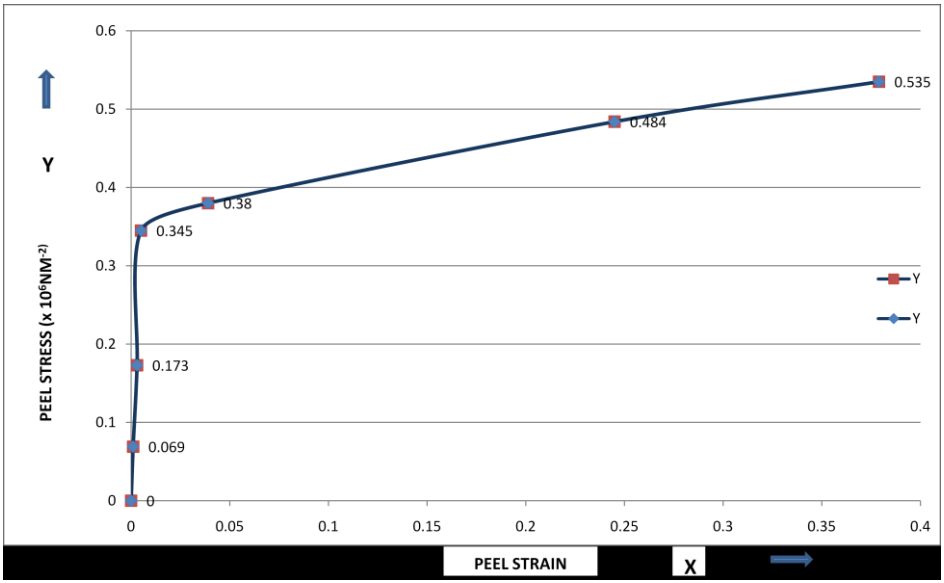

(Source: experimental data from table 4)

Figure 3 - Peel Stress vs. Peel Strain