Vol. 1 No. 2 (2022): VOLUME 1

INTERNATIONAL JOURNAL OF INDUSTRIAL AND PRODUCTION ENGINEERING (IJIPE)

JOURNAL HOMEPAGE: https://journals.unizik.edu.ng/index.php/ijipe/

DEVELOPMENT OF AN E-RICKSHAW FOR USE IN NIGERIA

Ken Ebikebina Zik and Chinedum Ogonna Mgbemena

Department of Mechanical Engineering, Federal University of Petroleum Resources, Effurun, Delta State, Nigeria

Corresponding Author: Ken Ebikebina Zik (zikken24@gmail.com)

Abstract

An electric rickshaw (e-rickshaw) was designed and fabricated at the Federal University of Petroleum Resources Effurun, Delta State Nigeria. The E-rickshaw can be charged using the existing national electric grid and solar energy. The 58 AH lithium battery used in the E-rickshaw can be fully charged within 8 hours. It has a brushless DC motor and a motor controller of 2500W/48V. The axle of the E- rickshaw was locally fabricated in the Mechanical Engineering Workshop, Federal University of Petroleum Resources, Effurun, Delta State, Nigeria. Solidworks software was used for the computer-aided design and MATLAB-Simulink was used for the powertrain and FTP75 drive cycles of the electric rickshaw. This development is a sustainable step toward mitigating environmental pollution from fossil fuels and promoting clean energy

Keywords: Electric Rickshaws, Hybrid Vehicles, MATLAB-Simulink, State of Charge.

1. Introduction

Over the years, paradigm shifts to develop electric vehicles with zero emissions have been on the increase. Moreover, the credit goes to improvements in electric motors and energy storage units. This vision for a sophisticated modern electric vehicle is becoming a viable option for the automobile industry. One of the greatest problems the world is facing today is global warming. With Greenland melting at an unprecedented rate, a rise in sea level is predicted if all its ice should melt. Global Ocean warming is a major factor that enhances the iceberg streaming from glaciers into the ocean. Global warming generally raises the atmospheric temperature which causes the disintegration of ice molecules into liquid form by melting. This increases the amount of water running into oceans thereby causing a rise in water level. Therefore, without the mitigation of continuous global warming, it will pose adverse effects on life (humanity, animal, and plants) and the global economy in different ways (Bevis et al., 2019).

Renewable energies play a greater role compared to other energy sources apart from climate change-related issues. Renewable energy sources are reliable and provide greater security due to their continuous availability (Okafor et al., 2022). Considering the cost, it is better than other traditional energy sources; it improves economic growth to a large extent and creates more jobs. We can no longer see climate change as just an environmental issue; it is a threat to humanity. Looking at its potential impact on economic activities, it is a serious developmental issue that needs urgent attention. It poses a serious threat to the sustainable development of many developing countries, including Nigeria.

Based on the predictions, a global increment in energy consumption will rise by 30% and greenhouse gas (GHG) emissions will decline at a rate of 25-60%. Various algorithms and operating models have been studied, analyzed, and validated for energy consumption and vehicle respectively. These analyses and validations were performed by several authors to optimize the discharging and charging properties or characteristics of vehicles (Fiori et al., 2016; Hannan et al., 2012). Research work on how electric cars can be charged using both solar and wind energy has been going on in the past (Delucchi & Jacobson, 2011; Jacobson & Delucchi, 2011; Liu, 2014).

The idea of using electricity to charge electric cars from the grid which was generated from traditional energy sources such as hydropower, fuel and coal has been investigated (Kelly-Detwiler, 2013). The emerging technology of using solar power in charging electric vehicles is attracting almost all automobile companies due to global warming policies, the effect of GHG, and the increasing demand for electric vehicles.

The idea of building solar power stations for charging electric vehicles during the daytime in vehicle parking locations has been investigated (Capasso & Veneri, 2015; Giannouli & Yianoulis, 2012)

The performance of an electric rickshaw is largely dependent on electric motor efficiency and battery system (Patel et al., 2016).

Research on a three-wheeler campus mobility vehicle shows that after the design and analysis, safety is guaranteed under varying load conditions. After testing, there were notable parameters used in the vehicle's performance evaluation. The design developed meets the standards of campus mobility (Singhal et al., 2015).

The research was conducted on electric vehicles and their power utilization which is stored in a battery via charging it from a solar panel. The charged batteries are used to power the motor which replaces the role of an engine and moves the vehicle in all directions. The overall performance of the electric vehicle was found to be satisfactory for the load of four people by testing it with an average speed of 40 Km/h (Sharada & Nataraj, 2014).

Various research has been performed concerning the vehicle controlling system, efficiency testing, vehicle dynamics modelling, track mapping analysis and DC motor characteristics (Hannan et al., 2012; Mgbemena et al., 2019, 2020; Singhal et al., 2015). These ensured the optimized sizing of the powertrain system for the vehicle and that the vehicle become managed robotically to function at most performance in every part of the powertrain system (Kulkarni, 2015).

Research was carried out to demonstrate the growing demand for environmentally friendly transportation and the role of electric vehicles as a potential means of cutting carbon emissions. The studies indicate that electric vehicles can appreciably lessen dangerous emissions of gases (Atiqur Rahaman et al., 2015).

One of the ways to mitigate the greenhouse effect is to stop or reduce the emission of carbon into the atmosphere. With prevailing trends in technological advancements, the utilization or adoption of renewable energy sources is the future for not just the automobile industry but the energy industry as well. The transition between energy sources guarantees modification of vehicle manufacturing processes and improved systems will aid the maximization of the benefits associated with diverse energy sources. In Nigeria, auto-rickshaw is currently one of the most common transportation media that convey people. As such, a large amount of GHG is emitted into the atmosphere thereby increasing air pollutants in the environs. Fuel is a non-renewable energy source that continually experiences price inflation which subsequently leads to an increase in transportation charges. This price hike has also impacted the economy.

Thus, Electric Vehicle is a reliable form of transportation system which is gaining importance in transforming the automobile sector and it does not impose any form of the environmental threat to humanity.
In summary, electric rickshaw usage should be encouraged as it saves the environment from the adverse effects of fossil fuels. Electric rickshaws are zero-carbon emission vehicles that mitigate the emission of toxic elements into the atmosphere. The most conspicuous challenges or problems which the adoption of the electric rickshaw as a transportation media will remedy include:

1. Dependence on the exportation of crude oil and importation of fuel has environmental and national security threats.
2. Hot weather.
3. Air pollution through the introduction of toxic wastes into the atmosphere.
4. Generation of waste heat.

The need for transformative change cannot be overemphasized. However, all of us ought to need it and pave the way towards achieving the sweeping change. Automakers could manufacture vehicles powered by green energy sources such as solar-powered or electric-powered vehicles.

2. Methodology

2.1 Materials and Methods

To cover the different aspects of developing an E-rickshaw. First, MATLAB/Simulink simulation of the E-rickshaw was carried out and followed by the development of the electric rickshaw. We focused on the conversion of an existing internal combustion engine-driven auto-rickshaw to a fully electric rickshaw. The first thing was to detach the unwanted components such as the internal combustion engine, the fuel tank, and the suspension system from the auto-rickshaw. The process of how to provide a power supply to charge the batteries of the electric rickshaw through an electrical source or solar panels from a solar farm or station was another part of the configuration. The basic decisions subjected to further review are electric motor and battery capacity selection to ensure that the motor can drive the vehicle and the batteries should be able to deliver the right current to the electric vehicle. The batteries should be lightweight to avoid extra weight. The basic design of the internal combustion engine-driven auto rickshaw is still the same, but alterations have been made by adjusting the wiring system, the suspension system, the development of the battery compartment etc.

The motor controller and battery will be installed in a compartment, placed below the driver seat. The batteries on a full charge can be used in running the rickshaw for up to 5hr. The powertrain diagram is an exhibition of the control system used in the vehicle. The controller is powered by current supplied by the charged battery. The entire computerized control devices are controlled by controllers. Based on control signals delivered, the motor, electric throttle, electric clutch, and speedometer and all indicators are controlled by the controller system. The powertrain diagram of the electric rickshaw is shown in Figure 1.

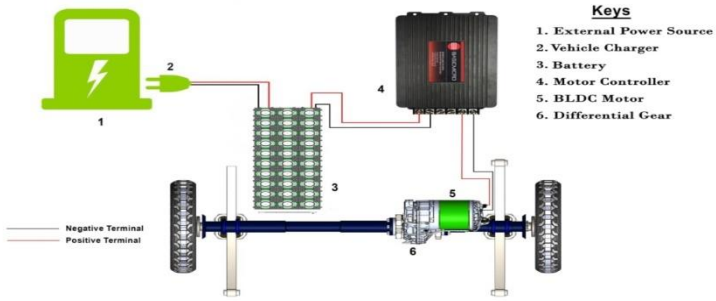

Figure 1. The developed vehicle Powertrain

2.2 Vehicle Components

In this section, important areas to be considered are the drive unit, battery, DC motor, controller, and energy consumption. The method of calculation is the same even though we are designing an electric rickshaw from scratch, or we are converting from a conventional rickshaw to an electric car. In this case, the focus is on the modification of an auto rickshaw powered by an internal combustion engine to an electrically driven rickshaw. For this project, a few components and factors must be subjected to the design and decision-making process. Below are some of the integral components for design with the selection criteria for each.

2.2.1 Drive Train

Electric vehicles are essentially designed following three different drivetrain systems. They are the in-wheel motor (IWM) system, a central motor with a single and multi-speed transmission. The in-wheel motor system provides better efficiency and decreases mass as it experiences low frictional losses and rotational inertia due to a reduction in moving components. Nevertheless, in-wheel motor suspension systems demand the application of a traction motor with excessive torque to accelerate the vehicle from the initial position of rest. IWM system is taken into consideration as the best configuration for the design of electric cars. The efficiency of an electric motor (EMs) relies upon the speed, torque, optimum operating condition, and efficiency decay. It relies upon the nature of EM related to weight, structure, materials, and design. Therefore, modification of the electric rickshaw powertrain with differential integration guarantees an increase in its top speed and driving range. Finally in this research IWM drivetrains were used, the other drivetrains use a single or multispeed transmission that enhances electricity intake because of better friction losses. The drive unit of the electric rickshaw is shown in Figure 2.

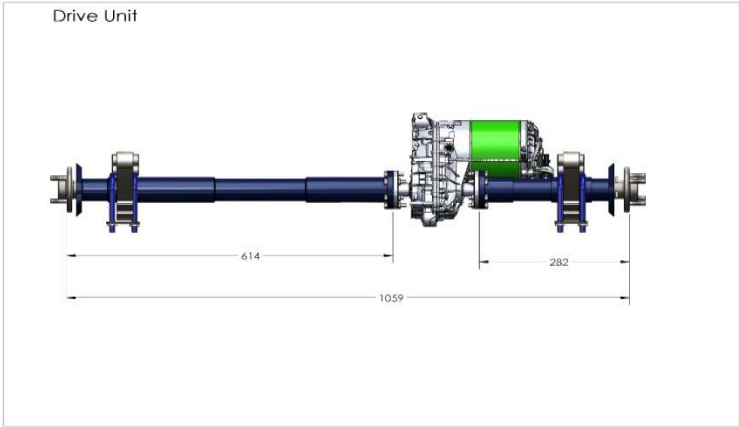

Figure 2. Drive Unit

2.2.2 BLDC Electric Motor

This motor rated 48V, 2500W was installed for the generation of mechanical drive energy from battery power. These motors are noiseless with less frictional losses, reliable, and safe to handle. Adopting the Hall Effect principle, the rotor is energized by the stator when the motor senses the stator position with the aid of a sensor. For the transmission of power to the wheel from the motor, the differential gears play a pivotal role. Brushless DC motors were chosen due to their high efficiency, high torque per amp capabilities, and relatively low maintenance requirements. The use of direct motor motors eliminates the current type of conversion thereby limiting losses within the conversion device. This leads to a reduction in cost. Utilization of DC motors enables easier speed control in a motor. DC motors generally use a non-oscillating frequency to deliver voltage and rotation is accomplished with a commutator. The mechanical power generated by the DC motor is transmitted to the wheel via a shaft. As such, electric energy is converted into mechanical energy through a circuit of components. Therefore, an electric motor rating determines the functionality of a vehicle in terms of speed, torque, power, etc. The DC motor selected for an electric rickshaw should be capable of generating the required torque, speed, and power to overcome opposing forces and loads acting on it. This phase of the paper focuses on power rating calculation which is necessary for driving the electric rickshaw. Table 1 is the BLDC motor specifications.

Table 1. BLDC Motor Specifications

PARAMETERS	RATE
Voltage	48V
Power	2500W
Weight	4.5kg
Diameter	95mm
Rated Torque	5.1Nm
Rated Speed	5600RPM
Efficiency	80%
Gear Ratio	1:6
Rated Current	45A



Figure 3. BLDC Electric Motor

2.2.3 Electric Motor Controller

The function of the brushless direct current (BLDC) motor controller includes resetting the operating mode of the motor by automatically or manually turning it on/off, motion (reverse or forward) selection, speed regulation, torque regulation and protection against surge and overloads. It is connected to a battery pack and the controller feeds the input to the motor, lamp, AC/DC converter, Speedometer/Indicator etc.

The controller supplies no power when the vehicle is stationary, full power when the accelerator pedals are tapped, or any power stage in between. The controller receives a 48-volts

direct current and supplies it to the motor in a controlled way. The proposed Brushless DC motor controller has the subsequent specification as shown in Table 2.

Table 2. BLDC Motor Controller Specification

PARAMETERS	RATE
Voltage	48V
Power	2500W
Current limit	40A
Efficiency	≥83%



Figure 4. Motor Controller

2.2.4 Axle

The axle is an essential component of vehicles and is classified into three types: Stub, Rear and Front axle. As an integral part of vehicles, axles are centralized shafts that are connected to wheels and turn alongside the wheels. Since the wheel propulsion power is controlled by the axles, the axles of a vehicle must be ordered to operate. Several factors are considered when determining the type of axle required by a vehicle.

The axle is a vital component in an e-rickshaw that holds up the differential and motor. We offer an axle designed to hold up motor weight and differential and also enhance the performance of the e-rickshaw. The quality of the axle is important for the safety, stability, and durability of the vehicle. Figure 5 shows the axle of the e-rickshaw.



Figure 5. Axle

2.2.5 Throttle

In this research, a throttle was used to control the speed of the BLDC electric motor. Generally, the throttle is used to control motor speed. A throttle is a kind of Potentiometer designed in a way that a specific common collector voltage is supplied from the main controller unit and outputs voltage reciprocal to the angle of the throttle that is supplied to the controller where it is processed to supply corresponding motor speed. It was found from our research that the throttle might be acting as a potentiometer and providing voltage according to rotation. The throttle is shown in Figure 6.



Figure 6. Throttle

2.2.6 Suspension System

Stability is a key factor that affects a vehicle's performance and safe driving. Ensuring stability to improve safety while driving is an important design consideration. The suspension system is that which connects the wheel and vehicle frame. In most vehicles, the leaf elastic spring is the most utilized component of the suspension system. Presently, the lightweight design of vehicles is of great importance in the enhancement of loading capacity and minimization of production costs. Due to the merits of low noise and lightweight, the application of the taper leaf spring was adopted in this research. Figure 7 shows the leaf sping.



Figure 7. Leaf Spring

2.3 Lithium-Ion Battery Selection

The battery is one of the most important components of the electric rickshaw. Batteries have a significant influence on other components and attributes of the vehicle, like the vehicle price, the range at which the rickshaw will travel the weight of the rickshaw, maximum traction motor torque, and maximum regeneration brake torque. All the electrical aspects of the electric rickshaw depend on the battery. Several battery types are used in the propulsion of electric vehicles but in this research, we are going to consider only Lithium-ion batteries. The main reason why we are considering Li-ion batteries is that Li-ion batteries have higher specific energy and specific power compared with other battery types.

Battery choice largely depends on the storage capacity which is the total energy stored to that which is retrieved, power transmission rate, discharge time, battery efficiency, cycling capacity, disposal, and environmental effects, and finally the self-discharge rate of the storage battery. Figure 8 shows a typical Lithium ion battery.

2.3.1 Battery Compartment Fabrication

In the fabrication, all components are well organized in such a way that they do not create any irritation to the passengers and the driver. As the batteries must be charged and replaced when the need arises, ease of accessibility was considered. Therefore, strategically positioning battery units must be carried out. There is a big unused area beneath the passenger seating which is an ideal location for battery housing as it can be closed effortlessly for protection and proximity to the motor and drive shaft. Consequently, the cable network will be enclosed and shorter, therefore cutting down costs. The batteries can easily be accessed from a hinged opening at the rear of the car, to ensure even distribution of weight. This will help mitigate wear and tear within vehicle parts. It will also enhance vehicle stability and handling during cornering situations. Using an angle bar, the batteries are secured to the chassis of the rickshaw with the aid of a stud and nut to the battery compartment. This will facilitate battery changeover as batteries are in a quick-release position; during vehicle operation, the battery movement will also be guided.

2.3.2 Calculation of the required Lithium-Ion Battery Capacity

Known data,
Power = 2500W
Time = 1hr
Efficiency 85%
Watt-hours = watt * hours = 2500watt * 1 hour = 2500watt hours
Watt-hours = watt * hours / efficiency = 2500 / 0.85 = 2941watt-hours
Since watts = amps * volts divide the watt-hours by the voltage of the battery to get Amp-hours of battery storage.
Amp-hours (at 48volts) =watt-hour / 48volt = 2500/48 =52Ah

Table 3. Battery Specification

PARAMETERS	RATE
Nominal Voltage	48V
Nominal Capacity	58A
Weight	2kg
Max. Charging Current	5A
Max. Discharging current	10A



Figure 8. Lithium-ion Battery

2.3.3 Charging Time Calculation

The charging current should be 10% of the Ah rating of the battery.

Charging current for 52Ah battery =52A * (10/100) =5.2 Amperes.
But in considering losses, assume the use of 10Amperes for battery charging purposes instead of 5.2Amp.
Therefore, the charging time of the battery = battery Ah / Charging current = 52 / 10 = 5.2 hrs.
To charge the battery fully, the battery must be charged for Approx. 5.2 hrs. And for fast charging AH, the charging time will be less than this time. But in this project, we choose 48V 58 AH for us to be on the safer side.

2.4 Vehicle Resistance Forces

There are various vehicle resistance forces witnessed during driving. The vehicle resistance forces include aerodynamic resistance, tire rolling resistance, gradient resistance, and inertia resistance.
Mathematically, the overall vehicle driving force is represented by Equation 1.

$$F_{odf} = F_{ad} + F_{gr} + F_{rr} \quad (1)$$

Where

F_{rr} refers to force exerted on the vehicle because of rolling resistance
F_{gr} refers to the force exerted on the vehicle because of gradient resistance
F_{ad} refers to the force exerted on the vehicle because of aerodynamic
F_{odf} refers to the overall tractive or driving force that must be exceeded by the motor output to drive the vehicle.

2.4.1 Tire Rolling Resistance

This is the resistance generated as a result of friction that exists between tire and road surfaces when in contact. Equation (2) gives a mathematical representation of rolling resistance.

$$F_{rr} = C_{rr} * M * g \quad (2)$$

Where,
C_{rr} refers to the rolling resistance coefficient
M refers to the mass
g refers to the gravitational acceleration = 9.81 m/s^2

For the application considered,
C_{rr} = 0.01,
M = 360 kg
Therefore,
F_{rr} = 360*9.81* 0.01 = 35.315 N
The power needed to overcome the rolling resistance of 35.315N is:

$$P_r = F_{rr} * V/3600 = 35.315 * 100/3600 = 0.98\text{kw} \quad (3)$$

Where P_r and V are the rolling power in KW and velocity in Km/h respectively.

2.4.2 Gradient Resistance

This is resistance experienced by a vehicle when mountaineering a flyover or hill or while moving down a slope. The ground makes an angle α with the inclined path, which is shown in Figure 9.

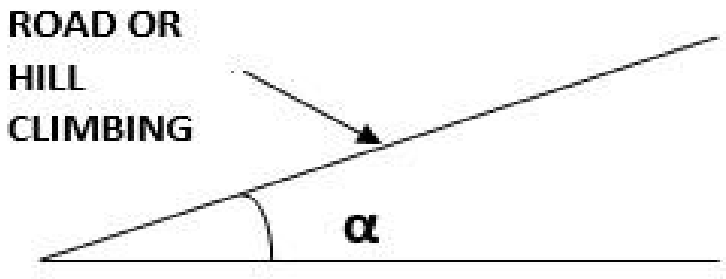

Figure 9. The angle between the ground and the slope of a path

Mathematically, the gradient resistance represented by Equation (4)

$$F_{gr} = M * g * sin \quad (4)$$

Let us assume the electric vehicle drives on a flat road.
That is, $\alpha = 0^{o}$

$$F_{gr} = 360 * 9.81 * \sin 0^{o} = 0 \text{ N.} \quad (5)$$

Therefore, the power requirement will be zero.

2.4.3 Aerodynamic Resistance

This is a resistance force that acts on the vehicle due to the action of a viscous force. Its determination is attributed to the vehicle's shape and size. The formula for calculating the aerodynamic drag is given by equation (6):

$$F_{ad} = 0.5 * \rho * V^{2} * C_{d} * A \quad (6)$$

Where,
ρ refers to the air density
V refers to the velocity
C_d refers to the coefficient of drag
A refers to the area

These are the three predominant resistant forces which act on the vehicle while it is moving. During acceleration and deceleration, inertia force also acts. Thus, the power required to overcome resistive forces and drag force will be assumed to be 1.3KW.
As such, the overall tractive power needed to drive the vehicle is determined below

$$P_o = 0.9 \text{ kW} + 1.3 \text{ kW} = 2.2\text{kW} \quad (7)$$

Hence, the electric motor rating to be utilized will be above 2.2 kW as power losses during transmission must be accounted for. Thus, the mechanical tractive power of the vehicle will be obtained with Equation (8):

$$M_t = \frac{P_o}{\eta} \quad (8)$$

Where,
η = gear system efficiency.

Assuming a gear system efficiency of 0.85, the mechanical tractive power required is:
$M_t = P_o / \eta = 2.2/0.85 = 2.5$ KW
Therefore, for a vehicle weighing 360 Kg, a motor with a power rating of 2.5 KW will be required.

2.5 CAD model of the E-rickshaw Drive Unit and body

The CAD model of the E-rickshaw drive unit is represented in Figure 10 with the part details. Figure 11 depicts the model of the E-rickshaw design showing the battery compartment and the drive unit.

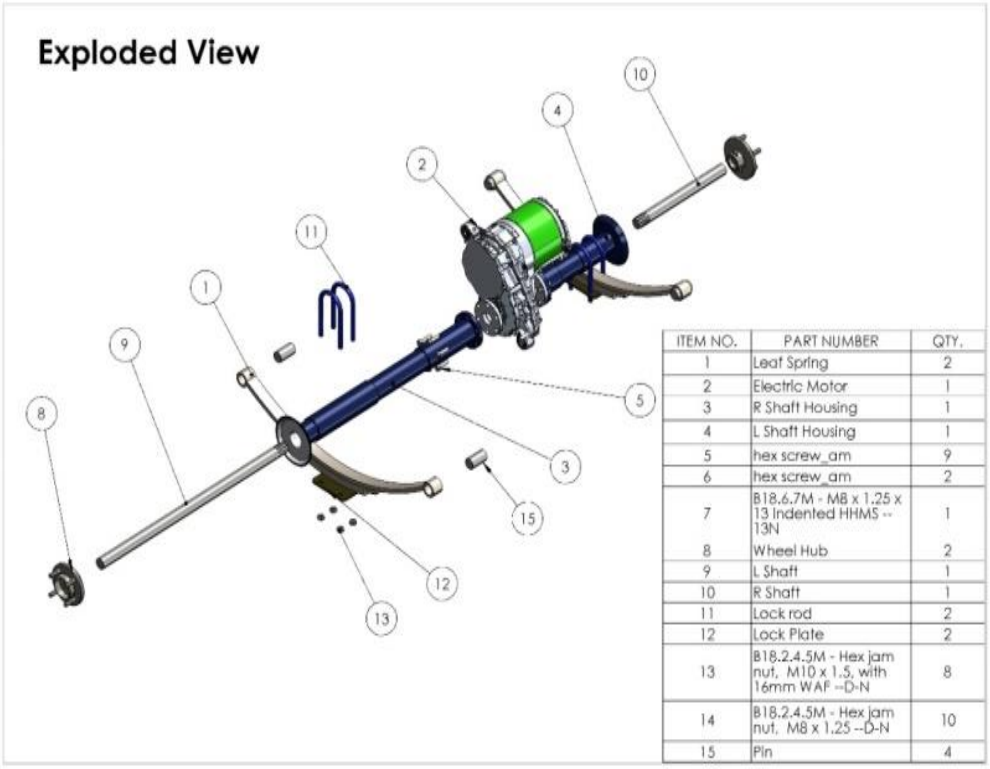

ITEM NO.	PART NUMBER	QTY.
1	Leaf Spring	2
2	Electric Motor	1
3	R Shaft Housing	1
4	L Shaft Housing	1
5	hex screw_am	9
6	hex screw_am	2
7	B18.6.7M - M8 x 1.25 x 13 Indented HHMS -- 13N	1
8	Wheel Hub	2
9	L Shaft	1
10	R Shaft	1
11	Lock rod	2
12	Lock Plate	2
13	B18.2.4.5M - Hex jam nut, M10 x 1.5, with 16mm WAF --D-N	8
14	B18.2.4.5M - Hex jam nut, M8 x 1.25 --D-N	10
15	Pin	4

Figure 10. Exploded View of the Drive Unit.

2.6 Driving Cycles

The EPA Federal Test Procedure, otherwise known as FTP-75 driving cycle was implemented on MATLAB-Simulink to determine the vehicle performance such as energy consumption and electric vehicle autonomy. Figure 11 shows a transparent view of the e-rickshaw showing the battery compartment and the axle.

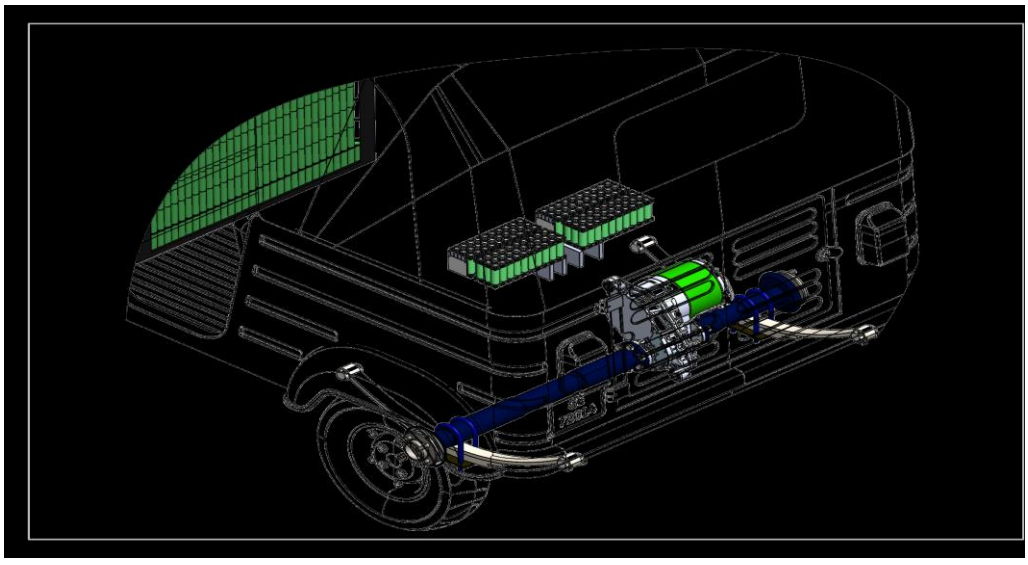

Figure 11. Transparent View of the Electric Rickshaw

3. Results and Discussion

3.1 The Powertrain

Electric rickshaws have a limited driving range compared to engine-driven autorickshaws. An accurate estimation of the electric-powered rickshaws range eliminates the risk of losing power while driving. However, the accuracy of current range estimators in E-rickshaws is low. To solve this problem, improved range estimation techniques are required. Nevertheless, the model of an E-rickshaw plays a crucial role in carrying out precise range estimation as its power requirements are considered. On this note, MATLAB/Simulink software was adopted in modelling the E-rickshaw. The E-rickshaw model comprises a longitudinal vehicle and a powertrain system. The modelled powertrain is designed using the electric motor efficiency map. In addition, it consists of a transmission and a battery model. A model of the driver is developed to manipulate the vehicle's speed and to symbolize the human driver's behaviour. Auxiliary appliances are also added in the electric car model to improve estimation accuracy for energy consumption. The model energy consumption values were compared with published values and validated to show satisfaction with accuracy.

3.2 FTP75 Drive Cycle

A plot of the drive cycle speed against vehicle speed feedback as shown in figure 12 is made to understand the model response to drive cycle data. With a simulation time of 2474 seconds, the simulation was done with the FTP75 Drive cycle. The speed comparison curve depicts the base vehicle velocity as typified by the yellow curve, which almost matches the actual velocity of the vehicle as typified by the blue curve, all through the simulation. At maximum decelerations, the curve exhibits a small deviation which can be traced to the vehicle's inertial effects and its control parameters. Refinement in the parameters will improve the performance of the drive system thereby limiting velocity variations and increasing vehicle distance coverage. The speed comparison below was provided by simulation.

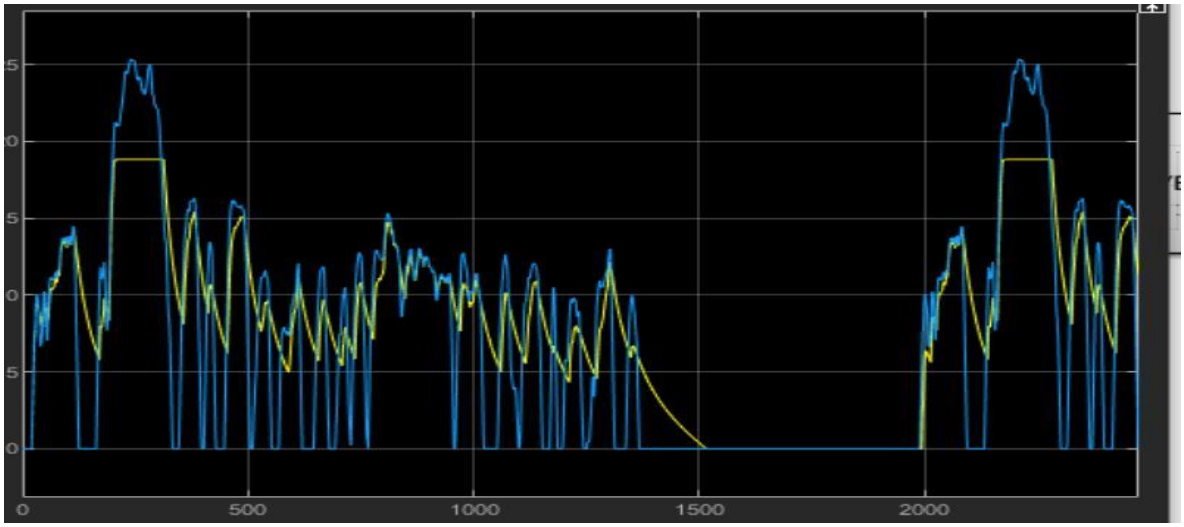

Figure 12. Speed Comparison Curve

Distance Travel (m/s)

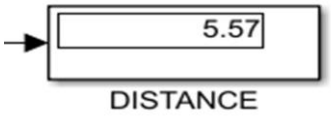

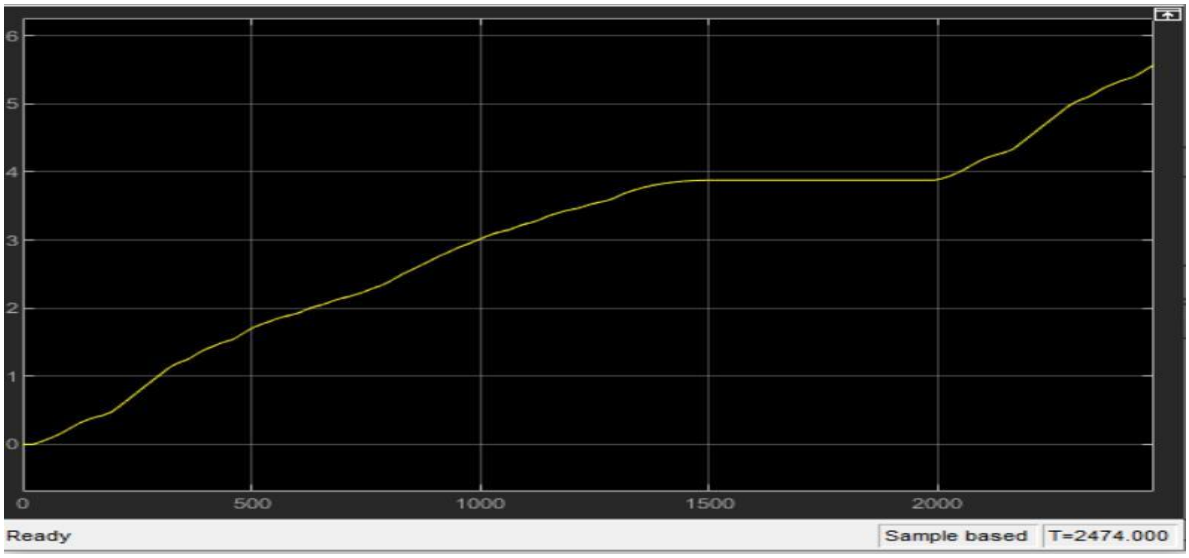

Figure 13. Distance Travel

The block depicts the vehicle distance coverage as shown in the simulation. The distance covered by the vehicle at end of the simulation time of 2474 seconds is approximately 5.57m/s or 20km/h.

3.3 State-of-Charge of Battery

The FTP75 drive cycle in Figure 14 shows different profiles for deceleration and acceleration and the random variance depicts a practical driving scenario which helps in tracking the nature of battery discharge while distinct acceleration profiles and the effect of regenerative charging on decreasing profiles. The SOC scope block enhances the tracking of unused battery capacity. At the 100% start point, the SOC of the battery decreased to 79.24% covering 20 Km in 40 minutes.

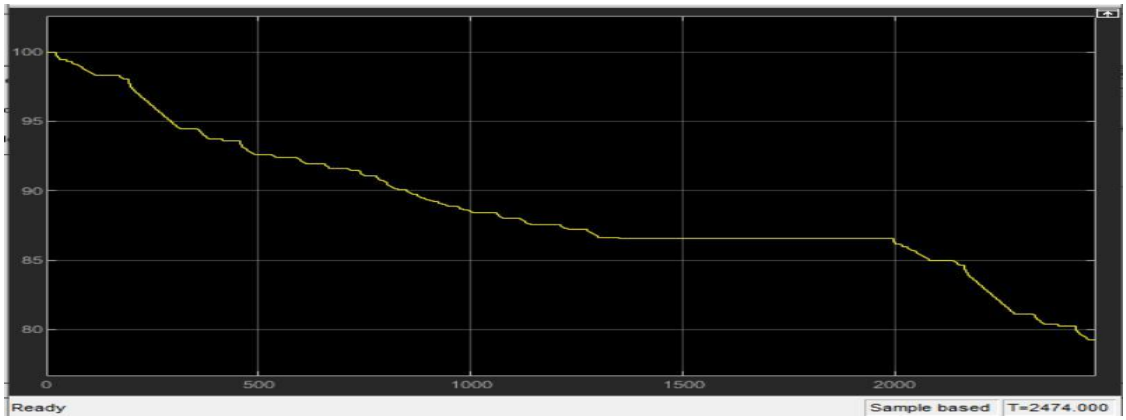

Figure 14. State-Of-Charge of Battery

4. Conclusions and Recommendations

An electric vehicle model was created, and simulation was done using MATLAB-Simulink and FTP75 drive cycle respectively. The overall simulation time was 2474 seconds. The speed curve used for comparison shows the model delivers at fair performance levels that satisfies deceleration and acceleration command. These commands can be identified in minor variations in velocity or speed feedback and actual drive cycle curve. A precise and detailed motor and vehicle variable parameterization was done to ensure compliance with the reference velocity signal which could in turn increase the overall system performance. Battery block variable

modification probably be useful in lowering the Depth-Of-Discharge percentage which in turn offers better mileage for the car in a single charge-discharge cycle.

The research on the electric vehicle was based on modifying the conventional auto rickshaw into an electric rickshaw by replacing the drivetrain with an axle and BLDC motor/differential while keeping the structure of the TVS rickshaw the same; that is, an electric motor drive, centrally located between driven wheels. The axle and the driveshaft were locally fabricated in the automobile/mechanical workshop Federal University of Petroleum Resource Effurun (FUPRE) Delta State Nigeria.

This research outcome has a widespread impact on both engineers and policymakers in Nigeria. This study has furnished a perception into the attitudes of technically minded people in Nigeria that believes in made in Nigeria goods. These people are vital to the fulfilment of any new technology. Technology enthusiasts, though they constitute a small percentage of the overall populace which can normally be trendsetters for technology and consequently their early adoption will make this technology more visible to the rest of Nigerians and the electric vehicle market. Their endorsement of the EV technology may convince other consumers to adopt the technology.

Secondly, this is an innovative campaign to sensitize relevant stakeholders about the benefits of using E-rickshaw and the use of alternative fuel which is the future of Nigeria's roadmap. Despite EVs being suitable for more motorists than ever before, a lack of understanding of the technology is stopping drivers from purchasing EVs. Conflicting and confusing information on the latest generation of electric vehicles has created a 'knowledge gap' in a way that potential buyers are holding back from choosing an electric vehicle. Finally, the realization of this project will reposition Nigeria as one of the pioneers in the electric vehicle revolution in Nigeria and sub-Saharan Africa, and the country will be recognized as a forerunner in the electric vehicle revolution in sub-Saharan Africa.

This study will help in building human capacity in the automobile manufacturing sector in Nigeria.

References

Atiqur Rahaman, M., Matin, M. A., Sarker, A., & Rubaiat Uddin, M. (2015). A Cost Effective Solar Charge Controller. *International Journal of Research in Engineering and Technology*, *04*(03), 314–319. https://doi.org/10.15623/ijret.2015.0403052

Bevis, M., Harig, C., Khan, S. A., Brown, A., Simons, F. J., Willis, M., Fettweis, X., Van Den Broeke, M. R., Madsen, F. B., Kendrick, E., Caccamise, D. J., Van Dam, T., Knudsen, P., & Nylen, T. (2019). Accelerating changes in ice mass within Greenland, and the ice sheet's sensitivity to atmospheric forcing. *Proceedings of the National Academy of Sciences of the United States of America*, *116*(6), 1934–1939. https://doi.org/10.1073/PNAS.1806562116

Capasso, C., & Veneri, O. (2015). Experimental study of a DC charging station for full electric and plug in hybrid vehicles. *Applied Energy*, *152*, 131–142. https://doi.org/10.1016/J.APENERGY.2015.04.040

Delucchi, M. A., & Jacobson, M. Z. (2011). Providing all global energy with wind, water, and solar power, Part II: Reliability, system and transmission costs, and policies. *Energy Policy*, *39*(3), 1170–1190.

Fiori, C., Ahn, K., & Rakha, H. A. (2016). Power-based electric vehicle energy consumption

model: Model development and validation. *Applied Energy*, *168*, 257–268. https://doi.org/10.1016/J.APENERGY.2016.01.097

Giannouli, M., & Yianoulis, P. (2012). Study on the incorporation of photovoltaic systems as an auxiliary power source for hybrid and electric vehicles. *Solar Energy*, *86*(1), 441–451. https://doi.org/10.1016/J.SOLENER.2011.10.019

Hannan, M. A., Azidin, F. A., & Mohamed, A. (2012). Multi-sources model and control algorithm of an energy management system for light electric vehicles. *Energy Conversion and Management*, *Complete*(62), 123–130. https://doi.org/10.1016/J.ENCONMAN.2012.04.001

Jacobson, M. Z., & Delucchi, M. A. (2011). Providing all global energy with wind, water, and solar power, Part I: Technologies, energy resources, quantities and areas of infrastructure, and materials. *Energy Policy*, *39*(3), 1154–1169. https://doi.org/10.1016/J.ENPOL.2010.11.040

Kelly-Detwiler, P. (2013). *Electric Cars and the Power Grid: How Are They Coming Together?* Forbes.

Kulkarni, P. (2015). Review of Hybrid Electrical Vehicles. *International Journal of Emerging Research in Management &Technology*, *4*(3), 24–31.

Liu, Q. (2014). Electric car with solar and wind energy may change the environment and economy: A tool for utilizing the renewable energy resource. *Earth's Future*, *2*(1), 7–13. https://doi.org/10.1002/2013EF000206

Mgbemena, C. ., Okongwu, M. ., & Ibhadode, A. O. . (2019). Design Considerations for Ladder Chassis of a Lightweight Vehicle. *FUPRE Journal of Scientific and Industrial Research*, *3*(1), 54–66.

Mgbemena, C. O., Ogunbunmi, O. S., & Mgbemena, C. E. (2020). Crashworthiness Analysis of a Shell Eco-Marathon Prototype Car. *2020 FUPRE Journal of Scientific and Industrial Research*, *4*(2), 2020.

Okafor, A. A., Mgbemena, C. O., & Oreko, B. U. (2022). Preparation, Characterization, Stability and Thermophysical Properties of Bio, Non-Bio (Metallic and Non-Metallic) and Hybrids Nanofluids: A Review. *Journal of Nanofluids*, *11*(6), 803–818. https://doi.org/10.1166/jon.2022.1896

Patel, S., Jadhav, P., Vasava, R., Roghelia, V., Gehani, A., & Kikani, D. (2016). Design And Development Of Three Wheeled Campus Vehicle. *INTERNATIONAL JOURNAL OF SCIENTIFIC & TECHNOLOGY RESEARCH*, *5*, 8.

Sharada, P. N., & Nataraj, K. R. (2014). Design and Development of Hybrid Electric Two-Wheeler Suitable for Indian Road Conditions. *International Journal of Electrical, Electronics and Data Communication*, *2*(9), 59–62.

Singhal, A. K., Shukla, L., Gupta, A., Iqbal, M., Singh, D., & Gupta, M. K. (2015). Solar Electric Powered Hybrid Vehicle. *Journal of Electronic Design Technology*, *6*(3), 1–9.