Effects of Selected Legume Crops on the Physicochemical Properties of Soils Contaminated with Spent Engine Oil in Owerri, Southeastern Nigeria

Mmadubueze, V.C[1]., Onwudike, S.U[2]., Nnabuihe, E.C[1], and Apalowo, A.O.[3]

[1]*Department of Soil Science and Land Resources Management, Nnamdi Azikiwe University Awka, Anambra State.*
[2]*Department of Soil Science and Technology, Federal University of Technology Owerri Imo State.*
[3]*Department of Crop Science and Horticulture, Nnamdi Azikiwe University Awka, Anambra State.*

KEYWORDS

Legume crops,
Soil properties,
Soil contamination,
Spent engine oil,
Soil remediation

***CORRESPONDING AUTHOR**

ec.nnabuihe@unizik.edu.ng
GSM no. 08034132996

ABSTRACT

The increasing use of automobiles has led to widespread environmental pollution due to the improper disposal of waste engine oil (WEO). This study evaluated the potential of selected legume crops: cowpea (Vigna unguiculata), mucuna (Mucuna pruriens), and groundnut (Arachis hypogaea), in remediating petroleum-contaminated soils through phytoremediation. The experiment was conducted in the Teaching and Research Farm of Federal University of Technology, Owerri, using a split-plot design within a randomized complete block design (RCBD). Soil contamination was induced by applying 5 liters of spent engine oil per plot, and the impact of legume crops on soil physicochemical properties was assessed after 90 days. Results showed that while particle size distribution remained unchanged (sand), groundnut significantly improved soil organic carbon (5.78 to 6.29 g/kg), exchangeable bases (Ca: 0.23 to 0.43 Cmol/kg, Na: 0.17 to 0.34 Cmol/kg), and cation exchange capacity (CEC) from 2.24 to 3.06 Cmol/kg in polluted soils compared to cowpea and mucuna. Oil pollution reduced soil moisture content ()from 216.2 to 142.2 %) and pH (5.96 to 5.57), but groundnut demonstrated the highest potential in restoring soil fertility. Given its ability to enhance soil chemical properties, groundnut is recommended for short-term remediation of used engine oil-contaminated soils. Further research is suggested to explore the long-term effects of legumes on hydrocarbon degradation and overall soil recovery.

INTRODUCTION

The rapid rise in automobile use has led to an alarming increase in the improper disposal of waste engine oil (WEO), with millions of gallons finding their way into the environment—discarded on land, poured into gutters, or dumped in trash. This unchecked pollution threatens soil health, groundwater, and surface water quality (Njoku *et al*., 2012, Plabita *et al*., 2013). As a result, soil contamination by petroleum hydrocarbons has become one of the most pressing environmental challenges worldwide (Cao and Li, 2010). Agricultural lands, once fertile, are losing productivity due to oil pollution, exacerbating food insecurity and undermining environmental sustainability (Efe *et al*., 2014). Addressing this crisis requires effective and sustainable solutions to decontaminate affected soils.

Phytoremediation presents itself as a promising, eco-friendly solution. This biological technology harnesses the natural ability of plants to break down, absorb, and remove contaminants from soil and water. Unlike conventional remediation methods—such as physical, chemical, and thermal techniques—which are often costly and environmentally intrusive, phytoremediation offers a low-cost and sustainable alternative (Njoku *et al*., 2009). It leverages the power of green plants, particularly legumes, which not only enhance microbial

degradation of hydrocarbons but also enrich the soil by fixing atmospheric nitrogen, a crucial factor in restoring oil-contaminated soils (Merkl *et al*., 2005).

While phytoremediation has been widely studied, most research has focused on using weeds (Banks *et al*., 2005), with limited attention to the role of food crops. However, crops like cowpea (*Glycine max*) have shown potential in improving the economic viability of remediation efforts (Njoku *et al*., 2009; Van de Lelie *et al*., 2001). Additionally, despite the favorable tropical climate, research on phytoremediation in tropical regions—especially concerning soils contaminated with used automobile oil—remains scarce (Gallegos Martinez *et al*., 2000). Compared to physicochemical methods, bioremediation is cost-effective and environmentally safer, though it often requires more time (Tang *et al*., 2010).

In Owerri, Imo State, where acid soils are vulnerable to oil contamination, little is known about the potential of leguminous crops combined with or without organic amendments in restoring soil fertility. While many studies focus on heavy metal remediation (Harayama *et al*., 2004; Gallizia *et al*., 2003), information on the role of legumes in rehabilitating petroleum-contaminated soils for agricultural use remains limited (Rivera-Cruz *et al*., 2004; Mager and Hernandez-Valencia, 2003). This study aims to bridge that knowledge gap by evaluating the effectiveness of selected leguminous crops in remediating petroleum-contaminated acid soils in Owerri. Findings from this research will contribute valuable insights to sustainable land management and enhance bioremediation strategies not only in Nigeria but also in other tropical regions facing similar challenges. The major objective of this work is to evaluate the impact of phytoremediation using selected legume crops on the physicochemical properties of petroleum-contaminated acid soils in Owerri, Imo State. The specific objectives include, to assess the physical and chemical properties of the study site before and after contamination, determine the effectiveness of legume crops in remediating petroleum-contaminated soils, and identify the most efficient legume crop for restoring soil health in oil-affected areas.

MATERIALS AND METHODS

Study Location: The study was conducted at the Teaching and Research Farm in School of Agriculture and Agricultural Technology (SAAT), Federal University of Technology, Owerri (FUTO), Imo State, Southeastern Nigeria. The area experiences an annual rainfall range of 1,950 – 2,500 mm and an average temperature range of 27–32°C, with a relative humidity of approximately 80%. It is classified as a lowland region with an altitude between 50 and 100 meters above sea level (Orajaka, 1975). The climate is characterized by two distinct seasons: the rainy season (April–October) and the dry season (November–March). The rainfall pattern follows a bimodal distribution, with peaks in July and September, separated by a short dry spell, commonly referred to as the "August break" (Obi and Salako, 1995). However, recent climatic variations due to global warming have influenced local weather patterns. Soils in the study area are classified as Ultisols (Typic Haplustult) (FDALR, 1985), derived from Coastal Plain Sands (Benin Formation) of the Oligocene-Miocene geological era. These soils are characterized by low organic carbon content, low cation exchange capacity (CEC), low basic cations, and low available phosphorus, with high susceptibility to leaching (Onweremadu *et al*., 2011, Nnabuihe *et al*., 2024). The dominant vegetation is tropical rainforest, though anthropogenic activities, including deforestation and agricultural practices, have led to significant ecological changes and vegetation depletion.

Field Study and Experimental Layout: A reconnaissance survey was conducted to identify the study site and obtain preliminary information about the area. Following site selection, a 13 × 8 m plot was delineated using ranging poles. The land was manually cleared, raked, and prepared for the experiment. The experimental field was structured into six beds, each measuring 3 × 2 m, and tilled using a local hoe and spade. The mapped area and experimental layout were designed to ensure uniformity and proper treatment application. The layout of the study area is presented below.

Experimental Design and Treatments: The experiment followed a split-plot design within a randomized complete block design (RCBD). The experimental site was divided into two sections: one contaminated with spent engine oil and one left uncontaminated, serving as the main plots. Within each section, three legume crops—Cowpea (CP), Groundnut (G), and Mucuna (M)—were assigned as sub-plots. Each treatment was replicated three times, ensuring statistical reliability.

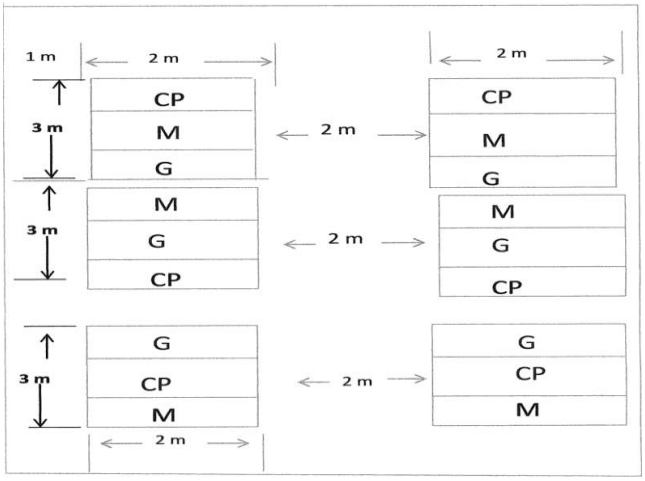

Polluted Plots Unpolluted Plots

Key: **G = groundnut, M = mucuna, CP = cowpea**

Fig. 1: Field layout of the experimental site

Bed Preparation and Treatment Application: The experimental beds, each measuring 3 × 2 m, were manually tilled to prepare the soil for planting. Two weeks prior to planting, a total of 5 liters of used engine oil, sourced from Nekede Mechanic Village, was applied to each plot designated for pollution. The oil was thoroughly mixed into the soil to a depth of 30 cm to ensure uniform distribution. After the oil application, two weeks later, two seeds of each legume crop—cowpea (CP), mucuna (M), and groundnut (G)—were planted in both the polluted and unpolluted plots. The planting was done at a spacing of 25 cm × 25 cm. Following germination, the seedlings were thinned to a single plant per stand, resulting in a total of 96 plants per plot and a plant population of 160,000 plants per hectare.

Soil Sampling Collection: Soil samples were collected using a random sampling technique from the study site at two key points: Pre-planting: A composite sample was taken at a depth of 0–30 cm for soil analysis. Post-planting: At 90 days after planting, soil samples were again collected from each treatment plot at the same depth for subsequent analysis. Agronomic Practices: Weeding was carried out at three and six weeks after planting to control weed growth. Insect control was achieved through manual hand-picking. Soil samples were air-dried at room temperature and kept free from disturbances. After drying, the samples were sieved using a 2 mm mesh sieve. The following analyses were then performed on the prepared soil samples: Particle Size Distribution: Determined using the hydrometer method (Gee and Or, 2002), with Sodium hexametaphosphate (Calgon) as a dispersant. Bulk Density: Measured using the core method, calculated as the mass of oven-dried soil divided by the volume of the core sampler (Foth, 1984). Total Porosity: Calculated from bulk density, assuming a particle density of 2.65 mg m^3, using the formula: Total Porosity (TP) =1 − (Bulk Density/Particle Density) × 100 (Foth, 1984). Soil Moisture Content: Determined gravimetrically. Soil pH: Measured electrometrically in a 1:2.5 soil:solution ratio (Hendershot *et al*., 1993). Organic Carbon: Determined using the wet oxidation method (Nelson and Sommers, 1982). Total Nitrogen: Determined by the modified micro-Kjeldahl method (Bremner and Mulvaney, 1982). Available Phosphorus: Extracted using Bray II solution and determined calorimetrically using a spectrophotometer (Olsen and Sommers, 1982). Exchangeable Bases (Ca, Mg, K, Na): Determined by extraction with IN ammonium acetate solution (Jackson, 1964). Exchangeable Calcium (Ca) and Magnesium (Mg) were quantified using ethylene diamine-tetra acetic acid (EDTA), while Potassium (K) and Sodium (Na) were measured using flame photometry. Exchangeable Acidity (Al^{3+} and H^{+}): Determined according to McLean (1982). Effective Cation Exchange Capacity (ECEC): Calculated by summing all exchangeable bases and exchangeable acidity. Base Saturation: Percentage base saturation was calculated by dividing the total exchangeable bases by the effective cation exchange capacity, multiplied by 100.

Statistical Analysis

The collected data were subjected to analysis of variance (ANOVA) using a split-plot design within a Randomized Complete Block Design (RCBD) framework. Treatment means were separated using the Least

Significant Difference (LSD) test at a 5% probability level ($p \leq 0.05$) to determine significant differences among treatments.

RESULTS AND DISCUSSION

Impact of Legume Crops on Soil Physical Properties of Oil-Polluted Soil: Table 1 showed the Pre-planting soil physicochemical properties of the studied location. The effects of cowpea, mucuna, and groundnut on oil-polluted soil are presented in Table 2. Results indicated that planting legume crops had no significant influence on the particle size distribution of the studied soil, and the textural class remained unchanged in both polluted and unpolluted soils. In polluted soil, the highest bulk density (1.36 Mg m^{-3}) was recorded in the groundnut plot, while the lowest was observed in the cowpea-planted plot. Conversely, in unpolluted soil, the highest bulk density was recorded in the cowpea plot. Notably, cowpea reduced bulk density from 1.31 Mg m^{-3} to 1.22 Mg m^{-3}, suggesting its potential in improving soil structure. Regarding soil moisture content, groundnut plots recorded the highest moisture level (216.2 g/kg) in unpolluted soil. However, oil pollution significantly reduced soil moisture content across all treatments, highlighting the adverse effect of petroleum contamination on soil water retention.

Table 1: Pre-planting soil physicochemical properties of the studied location

Soil Properties	Values
Sand (g/kg)	879.5
Silt (g/kg)	50.8
Clay (g/kg)	69.7
Textural Class	Sand
Bulk Density (Mg/m^3)	1.32
Total porosity (%)	53.6
Moisture Content (%)	129.9
pH in water	5.52
Organic Carbon (g/kg)	6.62
Organic Matter (g/kg)	11.4
Total Nitrogen (g/kg)	0.24
Available Phosphorus (mg/kg)	9.11
Exchangeable calcium (Cmol/kg)	0.46
Exchangeable magnesium (Cmol/kg)	0.33
Exchangeable Potassium (K)(mol/kg)	0.38
Exchangeable Sodium (Na)(mol/kg)	0.20
Total Exchangeable Bases	1.34
Exchangeable acidity (mol/kg)	1.38
Effective Cation Exchange Capacity(mol/kg)	2.72
Percentage Base Saturation (% BS)	48.3
C/N	27.6

Impact of Legume Crops on Soil Chemical Properties of Oil-Polluted Soils: The chemical properties of the studied soils are presented in Table 3. Results revealed that in the polluted soils, cowpea recorded a pH of 5.20, mucuna 5.16, and groundnut 5.57. Spent engine oil contamination significantly reduced soil pH from 5.88 to 5.16 in the mucuna-treated plot, indicating increased soil acidity due to petroleum pollution. Organic carbon levels also declined following oil pollution. This observation aligns with findings by Oyegoke *et al*. (2022), who reported that hydrocarbon pollutants can decrease soil moisture retention and alter pH levels, potentially due to the hydrophobic nature of oil reducing water infiltration and retention. In cowpea-treated soil, organic carbon reduced from 6.78 to 5.36 g/kg, while mucuna-treated soil showed a sharper decline, from 6.86 to 4.07 g/kg. This reduction can be attributed to microbial mineralization of carbon compounds. However, plots planted with groundnut exhibited an increase in organic carbon content from 5.78 to 6.26 g/kg, suggesting that groundnut facilitated the breakdown of hydrocarbons, enhancing organic matter content more effectively than cowpea and mucuna. This improvement is likely due to the plant's root exudates enhancing microbial activity, which in turn accelerates the degradation of hydrocarbons and enriches soil fertility. Similar enhancements in soil nutrient content through legume cultivation have been documented by Meištininkas *et al*. (2024), who observed that leguminous plants, in conjunction with biosurfactants, improved the degradation of diesel contaminants and restored soil health. Similarly, total exchangeable bases (TEB) improved after oil pollution, as shown in Table 3b. Groundnut-planted plots recorded the highest TEB

(0.92 cmol/kg) compared to 0.88 cmol/kg in unpolluted soil, further highlighting groundnut's role in enhancing soil fertility post-contamination.

Table 2: Impact of Legume Crops on Soil Physical Properties of Oil polluted soils

Legume Crops	Sand g/kg	Silt g/kg	Clay g/kg	BD mgm'³	TP %	MC %	Sand g/kg	Silt g/kg	Clay g/kg	BD mgm'³	TP %	MC %
Polluted							**Unpolluted**					
Cowpea (CP)	900.0	40.0	60.0	1.22	45.0	127.1	875.8	52.8	72.4	0.31	26.35	128.5
Mucuna(M)	910.0	50.0	40.0	1.25	46.2	160.6	897.1	28.8	72.3	0.27	28.06	116.6
Groundnut(G)	840.0	60.0	100.0	1.36	50.3	142.2	903.5	58.0	61.9	0.29	27.15	216.2
LSD (0.05)	**NS**	**NS**	**NS**	**0.03**	**27.28**	**11.4**	**NS**	**NS**	**NS**	**0.022**	**2.848**	**2.05**

NS = not significant at 0.05 probability level

Table 3a: Impact of Legume Crops on Soil Chemical Properties of Oil polluted soils

Legume Crops	pH	OC g/kg	OM g/kg	TN g/kg	AP Mg/kg	pH	OC g/kg	OM g/kg	TN g/kg	AP Mg/kg
Polluted						**Unpolluted**				
Cowpea (CP)	5.20	5.36	9.24	0.46	10.34	5.64	11.68	6.78	0.33	10.33
Mucuna(M)	5.16	4.07	7.02	0.37	10.32	5.88	6.86	11.82	0.16	14.46
Groundnut(G)	5.57	6.29	10.84	0.27	12.57	5.96	5.78	9.96	0.46	12.57
LSD (0.05)	**0.64**	**0.22**	**0.62**	**0.01**	**2.11**	**0.25**	**0.22**	**0.37**	**0.02**	**0.34**

Legume Crops	Ca	Mg	Na Cmol / kg	K	TE B	TE A	ECEC	BS %	C/N	Ca	Mg	Na Cmol/ kg	K	TEB	TEA	ECEC	BS %	C/N
	Polluted									Unpolluted								
Cowpea (CP)	0.21	0.22	0.21	0.12	0.64	1.21	1.85	33.6	11.65	0.50	0.42	0.23	0.47	1.62	1.34	2.96	53.7	20.5
Mucuna(M)	0.16	0.16	0.52	0.13	0.84	2.01	2.85	31.3	11.0	0.32	0.23	0.22	0.19	0.96	1.36	2.32	40.4	42.8
Groundnut(G)	0.43	0.15	0.34	0.12	0.92	2.14	3.06	29.10	23.3	0,22	0.26	0.17	0.23	0.88	1.36	2.24	38.4	12.5
LSD (0.05)	**0.27**	**0.44**	**0.21**	**0.01**	**0.47**	**0.35**	**0.22**	**12.75**	**0.52**	**0.37**	**0.55**	**0.05**	**0.02**	**0.39**	**0.75**	**0.39**	**18.37**	**0.44**

CONCLUSION AND RECOMMENDATION

This study evaluated the efficacy of legume crops in remediating oil-polluted soil through phytoremediation. Soil contamination was induced using used engine oil, and three legume crops—cowpea, mucuna, and groundnut—were cultivated. Soil samples were collected 90 days post-pollution to assess the impact of these crops on soil properties. Findings revealed that, despite oil pollution, particle size distribution remained unchanged. However, significant variations were observed in soil chemical properties between polluted and unpolluted soils. Among the tested legumes, groundnut demonstrated superior remediation potential, significantly enhancing soil organic carbon, exchangeable bases, and cation exchange capacity (CEC) compared to cowpea and mucuna. Based on these findings, the integration of specific leguminous crops, particularly groundnut, into phytoremediation strategies presents a viable, eco-friendly approach to restoring hydrocarbon-polluted soils, thereby contributing to sustainable environmental management practices.

REFERENCES

Banks, M. K., and Schultz, K. E. (2005). Comparison of plants for germination toxicity tests in petroleum-contaminated soils. *Water, Air, and Soil Pollution, 167*(1–4), 211–219.

Bremner, J. M., and Mulvaney, C. S. (1982). Total nitrogen. In A. L. Page, R. H. Miller, and D. R. Keeney (Eds.), *Methods of Soil Analysis, Part 2* (pp. 595–624). American Society of Agronomy.

Efe, S., Ighovie, I., and Elenwo, E. I. (2014). Phytoremediation of crude oil-contaminated soil with *Axonopus compressus* in the Niger Delta region of Nigeria. *Natural Resources, 5*, 59–67.

Federal Department of Agriculture and Land Resources (FDALR). (1985). *Reconnaissance soil survey of Anambra State of Nigeria*. Federal Department of Agriculture and Land Resources.

Foth, H. D. (1984). *Fundamentals of Soil Science* (7th ed.). John Wiley and Sons.

Gallizia, I., Rkklean, S., and Banal, I. M. (2003). Bacterial degradation of phenol and 2,4-dichlorophenol. *Journal of Chemical Technology and Biotechnology, 78*, 959–963.

Gee, G. W., and Or, D. (2002). Particle size analysis. In J. H. Dane and G. C. Topp (Eds.), *Methods of Soil Analysis, Part 4: Physical Methods* (pp. 225–293). Soil Science Society of America.

Harayama, S., Kasai, Y., and Mara, A. (2004). Microbial communities in oil-contaminated seawater. *Current Opinion in Biotechnology, 15*, 205–214.

Hendershot, W. H., Lalande, H., and Duquette, M. (1993). Soil reaction and exchangeable acidity. In M. R. Carter (Ed.), *Soil Sampling and Methods of Soil Analysis* (pp. 141–145). Lewis Publishers.

Ismail, S., and Ijah, U. J. J**.** (2020). Assessment of phytoremediation potentials of leguminous crops in oil-contaminated soil. *African Journal of Environmental Science and Technology, 14*(5), 123-134.

Jackson, M. L. (1964). *Soil Chemical Analysis*. Prentice Hall. *New York*, USA pp 498

Mager, D., and Hernandez-Valencia, I. (2003). Use of *Brachiaria brizantha* and *Panicum maximum* for bioremediation of soil contaminated with crude oil. Paper presented at the *5th Congress of Venezuela Ecology Magazine*, Venezuela.

McLean, E. D. (1982). Soil pH and lime requirements. In A. L. Page (Ed.), *Methods of Soil Analysis, Part 2: Chemical and Microbiological Properties* (2nd ed., pp. 199–234). Soil Science Society of America.

Meištininkas, P., Kacienė, G., and Karčauskienė, D**.** (2024). The role of biosurfactants in enhancing legume-mediated bioremediation of diesel-contaminated soils. *Environments, 11*(4), 64.

Merkl, N., Schulize-Kraft, R., and Infante, C. (2005). Assessment of tropical grasses and legumes for phytoremediation of petroleum-contaminated soils. *Water, Air, and Soil Pollution, 165*, 195–209.

Nelson, D. W., and Somers, L. E. (1982). Total organic carbon and matter. In A. L. Page (Ed.), *Methods of Soil Analysis, Part 2: Chemical and Microbiological Properties* (2nd ed., pp. 570). Soil Science Society of America.

Njoku, K. L., Akinola, M. O., and Oboh, B. O. (2012). Phytoremediation of crude oil-polluted soil: Effect of cow dung augmentation on the remediation of crude oil-polluted soil by *Glycine max*. *Journal of Applied Sciences Research, 8*(1), 277–282.

Njoku, K. L., Akinola, M. O., and Oboh, B. (2009). Phytoremediation of crude oil-contaminated soil: The effect of growth of *Glycine max* on the physico-chemistry and crude oil contents of soil. *Nature and Science*, 1–9.

Nnabuihe, E. C., Madueke, C. O., Okafor, M. J., Nwosu, T. V., Ibeh, C. U., Ibigweh, M. N., Nwaiwu, C. J., Ike, C. R., Onunwa, A. O., Okore, I. K., and Nnabude, P. C. (2024). Morphology, physico-chemical properties and classification of soils of coastal plain sands in Owerri, Imo State, Southeastern Nigeria. Paper presented at the *2nd Faculty of Agriculture International Conference, Nnamdi Azikiwe University, Awka*, March 12–14, 2024, pp. 232–239. Retrieved from https://journals.unizik.edu.ng/faic

Obi, M. E., and Salako, F. K. (1995). Rainfall parameters influencing erosivity in Southeastern Nigeria. *Catena, 24*, 275–328.

Olsen, S. R., and Somers, I. E. (1982). Soil available phosphorus. In D. L. Sparks, A. L. Page, P. A. Hennke, K. H. Loppez, E. N. Solanpour, and M. E. Summers (Eds.), *Methods of Soil Analysis, Part 2*. Agronomy Series, Soil Science Society of America.

Onweremadu, E. U., Ihem, E. E., Onwudike, S. U., Ndukwu, B. N., Idigbor, C. M., and Asiabaka, C. C. (2011). Evaluation of selected physical properties of soils as influenced by legumes and Prominol-P fertilization. *Journal of Emerging Trends in Engineering and Applied Science (JETEAS, 2)* (2), 198–202.

Orajaka, S. O. (1975). Geology. In G. E. K. Ofomata (Ed.), *Nigeria in Maps: Eastern States* (pp. 5–7). Ethiope Publishing House.

Oyegoke, T., Omotola, I., and Adelakun, A. (2022). Phytoremediation of used engine oil-contaminated soil using *Cymbopogon citratus* (Lemongrass). *International Journal of Engineering Science and Application, 10*(2), 78-91.

Plabita, B., Baruah, P. P., and Deka, S. (2013). Removal of hydrocarbon from crude oil-contaminated soil by *Cyperus brevifolius Rottb. Bulletin of Environmental Pharmacology and Life Sciences, 2*(6), 123–130.

Rivera-Cruz, M. D., Ferrera-Cerrato, R., Sanchez-Garcia, P., Volke-Haller, V., Fernandez-Linares, L., and Rodriguez-Vazquez, R. (2004). Decontamination of soils polluted with crude petroleum using indigenous microorganisms and aleman grass (*Chinocloa polystachya Mitche*). *Agrociencia*, *38*, 1–12.

Tang, J., Niu, X., Sun, Q., and Wang, R. (2010). Bioremediation of petroleum-polluted soil by combination of ryegrass with effective microorganisms. *Journal of Environmental Technology and Engineering*, *3*(2), 80–86.

Van der Lelie, D., Schwitzguebel, J., Glass, D. J., Vangronsveld, J., and Baker, A. (2001). Assessing phytoremediation's progress. *Environmental Science and Technology*, *35*(21), 446–452.