Design of a Low-Speed Cylindrical Pole Alternator Suitable for Bidirectional Flowing Water Body

Iyemeh Uchendu[1], Ogri J. Ushie[2], Julius A. Idajor[3], Ruth Asi[4], Obasi-Sam Ojobe Ojah[5]

[1]*Department of Computer Engineering, Faculty of Engineering and Technology, University of Calabar.*

[2, 3, 4 & 5] *Department of Electrical and Electronics Engineering, Faculty of Engineering and Technology, University of Calabar.*

[1]iyemehuchendu@unical.edu.ng
[2] *ogri.ushie@unical.edu.ng*
[3] juliusidajor@unical.edu.ng
[4]*ruthasi@unical.edu.ng*
[5]obasisamojobe@unical.edu.ng

***Abstract*— Hydropower energy from bidirectional water bodies such as river flow represents a largely underutilized renewable energy resource due to the challenges associated with low flow velocities, bidirectional motion, and variable operating conditions. This paper presents the design and evaluation of a low-speed alternator specifically developed for energy harvesting from such environments. The alternator design focuses on optimizing key electromagnetic parameters, including the number of poles and air-gap length, to enable effective power generation at very low rotational speeds without the use of mechanical gearing. A cylindrical alternator configuration incorporating 54 poles was implemented and experimentally evaluated. The prototype achieved an RMS output voltage of 13 V (open circuit condition) at a rotational speed of 40 rpm, which was identified as the minimum operational speed for useful energy extraction, with the output voltage increasing proportionally with rotational speed to approximately 26 V at 80 rpm. Experimental results further demonstrate a linear relationship between alternator speed and output frequency, highlighting an inherent limitation of low-speed alternators operating under variable flow conditions. The findings confirm the feasibility of direct-drive, low-speed alternator designs for bidirectional hydropower energy harvesting while underscoring the need for effective frequency stabilization. Ongoing work is directed toward the development of a frequency-conditioning mechanism to enable stable power delivery for practical applications.**

***Index Terms*— Low-Speed Cylindrical Pole Alternator, Bidirectional Flowing Water, Hydropower Energy, renewable energy resource and optimizing electromagnetic parameters**

I. INTRODUCTION

Electrical power is essential for any modern society, which drives economic development, industrial productivity, which drives economic development, industrial productivity, healthcare delivery, communication systems, and overall quality of life. As global energy demand continues to rise—driven by population growth, urbanization, and technological advancement [1]—it becomes challenging to meet this demand in a sustainable and environmentally responsible manner. This is the main challenge facing the Nigerian power system as the current amount of power generated is nowhere close to the required amount for sustainable power in the country. The fossil-fuel-based power generation which is associated with finite resource depletion, greenhouse gas emissions, and long-term environmental degradation [2], is the main way individuals and organisations meet their power need. Hence, the development and deployment of renewable energy systems that can deliver clean, reliable, and scalable electrical power is essential for our society.

Hydropower occupies a unique and prominent position among the renewable forms of energy. It harnesses the kinetic and potential energy of moving water to produce electricity [3], offering several advantages over other renewable sources such as solar and wind. These advantages include high energy density, predictable and controllable output, relatively high conversion efficiency, and low operational emissions [2]. In many regions including Nigeria, hydropower has served as a backbone of national energy systems, providing both baseload power and grid stabilization services.

Traditionally, hydropower generation has been dominated by systems that exploit water bodies that flow in one direction, high hydraulic head, and significant pressure differentials. Large dams constructed across rivers create artificial reservoirs that store water at elevated heights, allowing controlled release through penstocks to drive high-speed turbines coupled to electrical generators [2]. This approach enables efficient energy conversion due to the substantial mechanical power available from the high head and steady flow conditions. Variants of this model include run-of-river systems, which rely on natural river flow with minimal storage, and pumped-storage facilities, which provide grid-scale energy storage by cycling water between reservoirs at different elevations [2]. For us to use hydropower in this way, there has to be a one directional flowing body of water.

However, Nigeria and most countries of the world are blessed with bidirectional flowing water bodies that are not suitable for the conventional hydropower configuration as it is incompatibility with bidirectional flowing waters which have low head, and low flow velocity. Bidirectional waters have low hydraulic head, its flow velocities vary significantly over time, and the direction of flow reverses periodically. Conventional dam-based solutions are ill-suited to these conditions, as they are typically designed for unidirectional flow and rely on maintaining a consistent pressure differential across the turbine. Although tidal barrages and lagoons represent one attempt to adapt dam-like structures to tidal environments, they inherit many of the same environmental and economic drawbacks associated with large dams, including high construction costs, ecosystem disruption, and limited site availability [4].

This limitation of dam-based hydropower for bidirectional flow environments has motivated growing interest in approaches that can directly exploit the kinetic energy of moving water without requiring large hydraulic head or flow rectification. Central to this challenge is the design of electrical generators—specifically alternators—that can operate efficiently at low rotational speeds.

A low-speed alternator suitable for bidirectional water bodies must therefore satisfy a unique and demanding set of requirements. It must be capable of generating usable electrical power at rotational speeds significantly lower than those of conventional machines, while maintaining acceptable efficiency and power density. One of the primary constraints in low-speed alternator design is the trade-off between rotational speed and electromagnetic torque [5]. At lower speeds, higher torque is required to achieve a given power output, which in turn necessitates increased magnetic flux, larger machine dimensions, or higher current levels. Achieving sufficient magnetic flux at low speeds may require the use of high-performance permanent magnets or increased numbers of poles, both of which introduce additional design considerations and potential cost implications.

Several low-speed alternator designs have been reported in literature. [6] reported a low-speed alternator 100 rpm with 100 poles, while [7] reported a speed of 150 rpm with 18 poles. However, they didn't consider the case for variable speed that would be suitable for bidirectional water bodies.

This paper focuses on the design considerations, constraints, and performance implications of low-speed alternators for bidirectional hydropower applications, with the goal of contributing to the development of more adaptable, sustainable, and environmentally compatible renewable energy systems.

Section II: Theoretical Background of Alternators

Alternators are electromechanical energy conversion devices that converts mechanical power supplied by a prime mover into alternating electrical power through the principle of electromagnetic induction [8]. The fundamental operation of an alternator is governed by Faraday's law, which states that a time-varying magnetic flux linking an electrical conductor induces an electromotive force (EMF) in that conductor [9]. In rotating electrical machines, this time variation is produced by the relative motion between magnetic fields generated by the rotor and electrical windings placed on the stator.

2.1 Principle of Electromagnetic Induction

Faraday's law of electromagnetic induction may be expressed as

$$e(t) = -N\frac{d\Phi_t}{dt} \quad (1)$$

where $e(t)$ is the instantaneous induced EMF, N is the number of turns in the winding, and Φ_t is the magnetic flux linking the winding. In an alternator, the rotor carries either a field winding or permanent magnets that establish a magnetic flux Φ_t, while the stator contains armature windings in which voltage is induced. As the rotor rotates at an angular velocity ω_m, the magnetic flux linking the stator windings varies sinusoidally with time, resulting in an alternating voltage waveform.

2.2 Relationship Between Mechanical Speed and Electrical Frequency

One defining characteristics of an alternator is the relationship between mechanical rotational speed and the electrical frequency of the generated voltage. This relationship is governed by the number of magnetic poles P on the rotor and is given by

$$f = \frac{P \times n}{120} \quad (2)$$

Where f is the electrical frequency in hertz (Hz), P is the total number of magnetic poles, and n is the mechanical rotational speed in revolutions per minute (RPM). This equation identifies two design constraints for low-speed alternators. First, at low mechanical speeds, achieving a usable electrical frequency requires a high number of poles. For example, generating a 50 Hz output at 60 RPM would require 100 poles. Secondly, for the use case in bidirectional flowing water body, the speed (n) will be varying, which would result in a varying frequency. Hence, many low-speed alternator systems operate at non-standard and varying frequencies and rely on power electronic interfaces for frequency conditioning [2].

2.3 Induced Voltage and RMS Output

For a sinusoidally distributed magnetic field, the RMS value of the induced phase voltage in an alternator can be expressed as

$$E_{rms} = 4.44 k_w f N \Phi \text{ s} \quad (3)$$

Where k_w is the winding factor (accounting for coil pitch and distribution), f is the electrical frequency, N is the number of series turns per phase, and Φ is the peak magnetic flux per pole. Equation 3 shows that the RMS output voltage is directly proportional to frequency, magnetic flux, and the number of turns in the stator winding. In low-speed

alternators, the electrical frequency is inherently low due to reduced rotational speed, which in turn reduces the induced voltage unless compensated by increasing the magnetic flux or the number of turns.

2.4 Role of the Air Gap

The air gap between the rotor and stator plays a critical role in determining the magnetic flux distribution and overall machine performance [5]. The air-gap flux density B_g can be approximated by

$$B_g = \frac{\mu_0 H_g}{g} \quad (4)$$

Where μ_0 is the permeability of free space, H_g is the magnetomotive force across the air gap, and
g is the air-gap length. A smaller air gap increases the magnetic flux density and improves electromagnetic coupling between the rotor and stator, leading to higher induced voltage and torque. In high-speed alternators, thermal expansion and vibration limit how small the air gap can be made. However, in low-speed alternators, the air gap can be further reduced as the low speed of the alternator results in reduced thermal expansion and vibration.

2.5 Winding Configuration and Pole Interaction

The stator winding configuration strongly influences voltage magnitude, harmonic content, and machine efficiency. Distributed windings improve waveform quality and reduce harmonics but occupy more space, while concentrated windings offer compactness and higher slot fill factors at the expense of increased harmonic distortion. The winding factor k_w, which is the product of the pitch factor and distribution factor, directly affects the RMS voltage according to the induced voltage equation.

In high-pole-count machines, careful coordination between the number of poles and the number of stator slots is required to minimize cogging torque, torque ripple, and acoustic noise [10]. This interaction is particularly important in low-speed alternators, where torque pulsations are more pronounced due to high torque operation.

Section III: Alternator Design and Results

In this cylindrical salient pole alternator design, we optimize the number of poles, air-gap geometry, and winding configuration to achieve acceptable electrical performance while maintaining mechanical robustness and reliability. The alternator was designed and tested using COMSOL Multiphysics 6.2. A schematic of the design is presented in Figure 1.

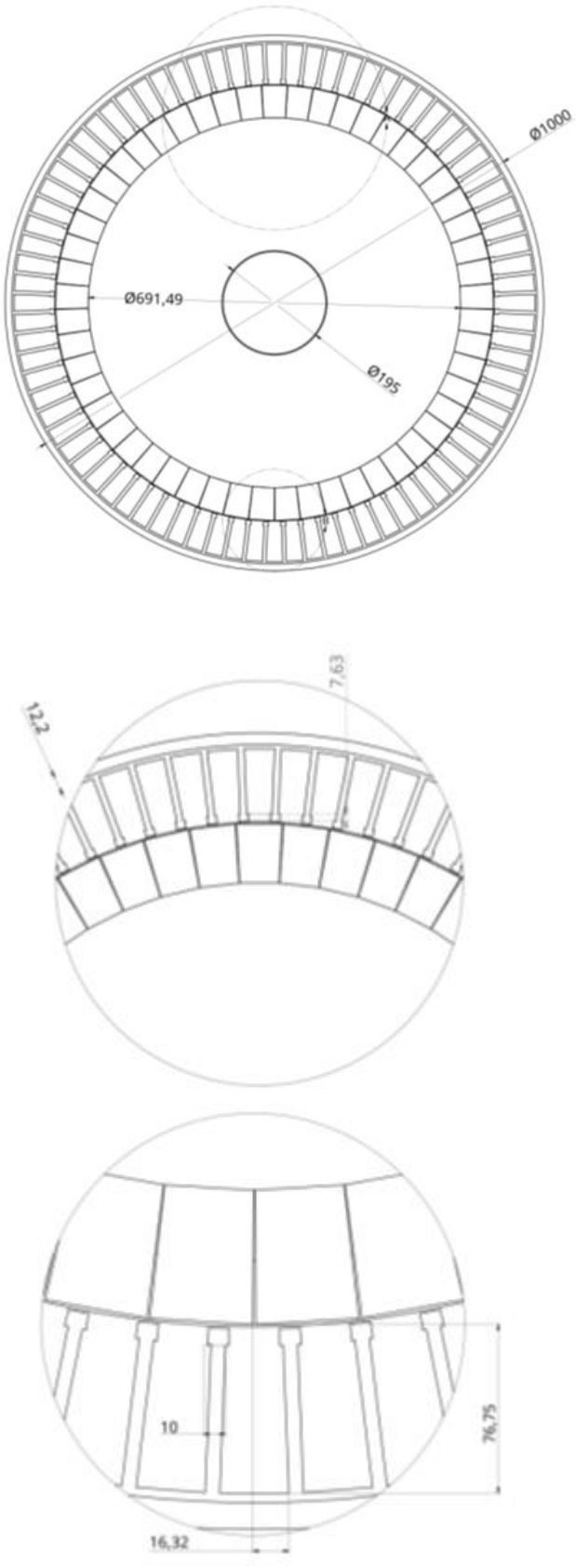

Figure 1: Schematic of the designed alternator (all dimensions are in mm)

To achieve low speeds, the number of poles (P) in the design is 54 and 80 stator slots. The alternator had an outer diameter of 1000 mm. The diameter of the rotor is 691.5 mm and the air gap between the rotor poles and the stator slots is

10 mm. This little airgap can be tolerated in this application as the speed of the alternator is low. The cylindrical design is shown in Figure 2.

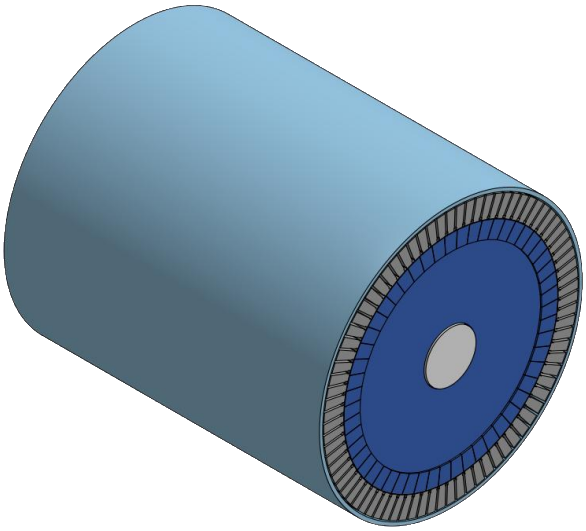

Figure 2: Fully designed cylindrical schematic of the alternator

The alternator was tested for speeds ranging from 40 to 80 rpm and the results are presented in Figure 3.

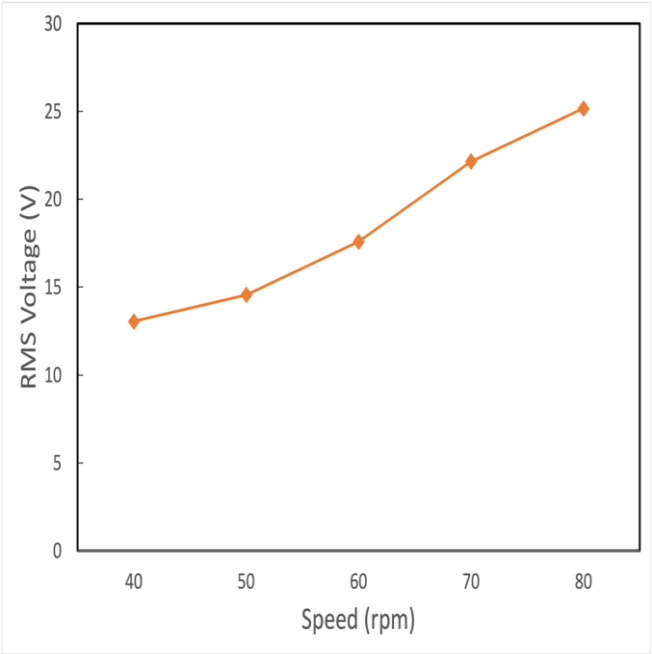

Figure 3: RMS Voltage and speed relationship for the designed alternator.

The alternator produces an RMS voltage of 13 V at a minimum rotational speed of 40 rpm tested under open circuit condition (no attached load). Experimental testing was limited to speeds at or above this value because it represents the lowest rotational speed at which sufficient torque is induced on the turbine by the bidirectional water flow. In bidirectional water bodies, such as tidal systems, the direction of flow reverses periodically due to the gravitational influence of the moon. At the point of flow reversal, the water velocity approaches zero, resulting in negligible torque generation. Consequently, 13 V is defined as the minimum voltage threshold at which useful electrical power can be harvested from the water body.

As the velocity of the water body increases following flow reversal, the induced hydrodynamic torque increases, leading to a higher rotational speed of the alternator. This results in a corresponding increase in the induced voltage. At a rotational speed of approximately 80 rpm, the alternator produces an RMS voltage of about 26 V, enabling the system to harvest a significantly higher amount of electrical power and operate in a more efficient energy conversion regime.

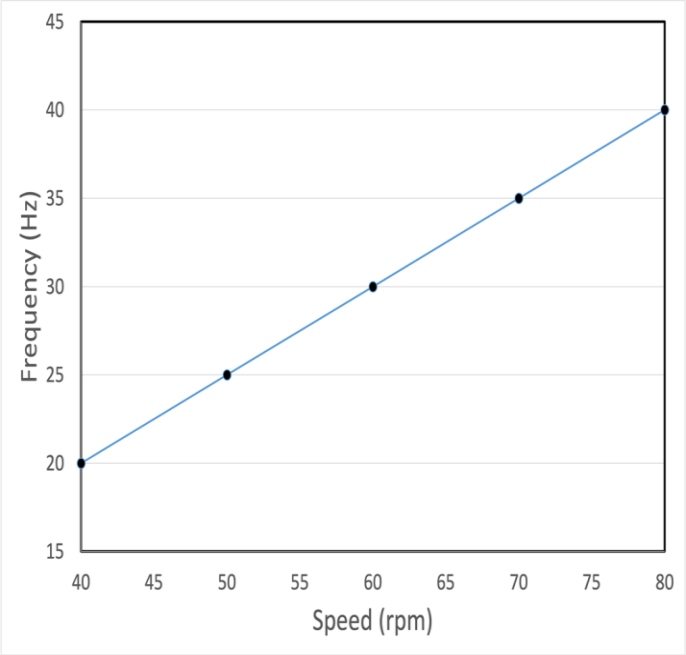

Figure 4: Relationship between frequency and speed of the designed alternator

Figure 4 illustrates the relationship between the alternator's rotational speed and the resulting electrical frequency. Because the velocity of the water body varies over time, the rotational speed of the alternator is inherently variable. As shown in the figure, the generated electrical frequency exhibits a linear dependence on the alternator speed, consistent with fundamental alternator theory. While this behavior is expected, it represents a key limitation of low-speed alternators operating under variable flow conditions, as the resulting output frequency is not inherently stable.

To enable practical use of the alternator for the intended application, a frequency-stabilization mechanism is therefore required. Such a device would regulate or condition the generated electrical output, ensuring a stable frequency prior to power distribution or utilization. The design and implementation of an appropriate frequency-stabilization approach constitute the next major focus of this research.

Section IV: Conclusion

This paper presented the design and evaluation of a low-speed alternator intended for harvesting hydrokinetic energy from bidirectional water bodies. The design focused on optimizing key alternator parameters—particularly the

number of poles and air-gap length—to achieve usable RMS voltage levels at very low rotational speeds. A cylindrical alternator configuration with 54 poles was implemented, enabling the system to generate an RMS voltage of 13 V at a rotational speed of 40 rpm, which represents the minimum operational speed for practical energy extraction. As expected, the output voltage was observed to increase with increasing alternator speed.

A primary limitation of the proposed alternator is the variable output frequency resulting from fluctuations in rotational speed driven by changing water flow conditions. While this behavior is inherent to low-speed alternators operating under variable input conditions, it restricts direct utilization of the generated power. Ongoing research therefore focuses on the development of an efficient frequency-stabilization mechanism to regulate the electrical output and maintain steady, usable frequencies, thereby enhancing the practical applicability of the proposed system for real-world hydrokinetic energy harvesting.

Recommendation: Further research can be carried out to increase the output to 50Hz.

Acknowledgement

We hereby use this medium to sincerely appreciate TETFUND and the University of Calabar, Calabar (UNICAL), for sponsoring this research under the Institution Based Research (IBR) Platform.

References

[1] International Energy Agency. (2024). *World Energy Outlook 2024*. https://www.iea.org/reports/world-energy-outlook-2024 , [Accessed: 26th January, 2026]

[2] P. A. Owusu and S. Asumadu-Sarkodie, "A review of renewable energy sources, sustainability issues and climate change mitigation," *Cogent Eng.*, vol. 3, no. 1, 2016, Art. no. 1167990, doi: 10.1080/23311916.2016.1167990.

[3] R. Billinton and K. Turka, *Reliability Evaluation of Power Systems*, 3rd ed. Piscataway, NJ, USA: IEEE Press, 2018.

[4] G. W. Baker, S. J. Thackeray, and I. J. Winfield, "The environmental interactions of tidal and wave energy generation: A review," *Ocean Coast. Manag.*, vol. 99, pp. 101-115, Oct. 2014, doi: 10.1016/j.ocecoaman. 2014.06.014.

[5] J. F. Gieras, R. J. Wang, and M. J. Kamper, *Axial Flux Permanent Magnet Brushless Machines*, 2nd ed. New York, NY, USA: Springer, 2008.

[6] D. S. L. G. P. Putra, "The low rotation 1 phase AC generator using multiple stator and rotor method in the floating-hydro power plant," *JEEMECS (J. Electr. Eng. Mechatron. Comput. Sci.)*, vol. 2, no. 2, pp. 47–50, Aug. 2019, doi: 10.26905/jeemecs.v2i2.3205.

[7] S. Syafriyudin and M. Mujiman, "Design of low-speed generator 1 phase using permanent magnetic type neodymium," *IOP Conf. Ser.: Mater. Sci. Eng.*, vol. 807, no. 1, p. 012012, Apr. 2020, doi: 10.1088/1757-899X/807/1/012012.

[8] O. O. Ayodele and O. A. Oyedeji, "Design and construction of 3.5 kW fuel-less generator," *Sci. J. Eng. Technol.*, vol. 2, no. 1, pp. 1–10, 2025. [Online]. Available: journals.stecab.com.

[9] S. J. Chapman, *Electric Machinery Fundamentals*, 5th ed. New York, NY, USA: McGraw-Hill, 2011.

[10] Su Yong Kim; A study on motor characteristics based on pole-slot combinations. *AIP Advances*1 January 2024; 14 (1): 015127. https://doi.org/10.1063/9.0000647

Authors' Profile



Dr. Iyemeh Uchendu is currently a Post Doctoral Researcher at the University of Colorado, Boulder. He obtained his PhD in Electronics Engineering in 2018 from the University of Surrey, UK. His current research interest are in wireless systems, RF engineering and renewable energy. iyemehuchendu@unical.edu.ng



Dr. Ogri J. Ushie received a B. Eng. in 2002 and MEng in 2008 in Electrical Electronics Engineering from Federal University of Technology-Yola and Abubakar Tafawa Belewa University-Bauchi both in Nigeria respectively. He obtained a PhD degree at Brunel University London in 2016. He is also a member of NIEEE. He is a Cooperate member Nigerian Society of Engineers and a registered Engineer with Council for the Regulation of Engineering in Nigeria. His research interest is in area of 'Intelligence Optimisation of Analog Electronic Circuit using Machine Learning.'



Dr. Julius Achirigbor Idajor is a Lecturer I in the Department of Electrical and Electronics Engineering, Faculty of Engineering and Technology, University of Calabar, Calabar, Nigeria. He obtained his B.Sc. degree in Electronics and Computer Technology, M.Sc. in Engineering Physics (Telecommunications), and Ph.D. in Engineering Physics (Electronics), all from the University of Calabar, Nigeria. His academic and research interests span areas of electronics, telecommunications, and applied engineering systems. Dr. Idajor is actively engaged in teaching, research, and academic development within the engineering discipline. He can be reached via his institutional email: juliusidajor@unical.edu.ng.



Ruth Asi is a COREN-registered Electrical and Electronics Engineer and Lecturer II in the Department of Electrical/Electronic Engineering, University of Calabar, Nigeria. She has over ten years of post-graduation experience in electrical systems, instrumentation, and engineering operations. Her research interests include power systems transmission and distribution, power system stability and control, renewable energy systems, smart grids and intelligent monitoring, signal processing applications in power systems, instrumentation and measurements. She is currently involved in research on low-speed alternators for bi-directional hydropower applications, focusing on system design, testing, and performance optimization. She holds an MSc in Communication Engineering from the University of Manchester, United Kingdom, and a B.Tech in Electrical and Electronic Engineering from Rivers State University, Nigeria formerly known as Rivers State University of Science and Technology where she graduated with a Second Class Upper Division. She is a registered engineer with COREN and has additional training in cybersecurity. Her expertise includes equipment commissioning, maintenance and fault diagnosis.



Engr. Obasi-Sam Ojobe Ojah, a Lecturer in the Department of Electrical and Electronics Engineering, University of Calabar. He holds B. Eng (Hons), M. Eng, Cross River University of Technology (CRUTECH), Calabar. PhD in view, University of Port Harcourt. obasisamojobe@unical.edu.ng